BLOCK DIAGRAM

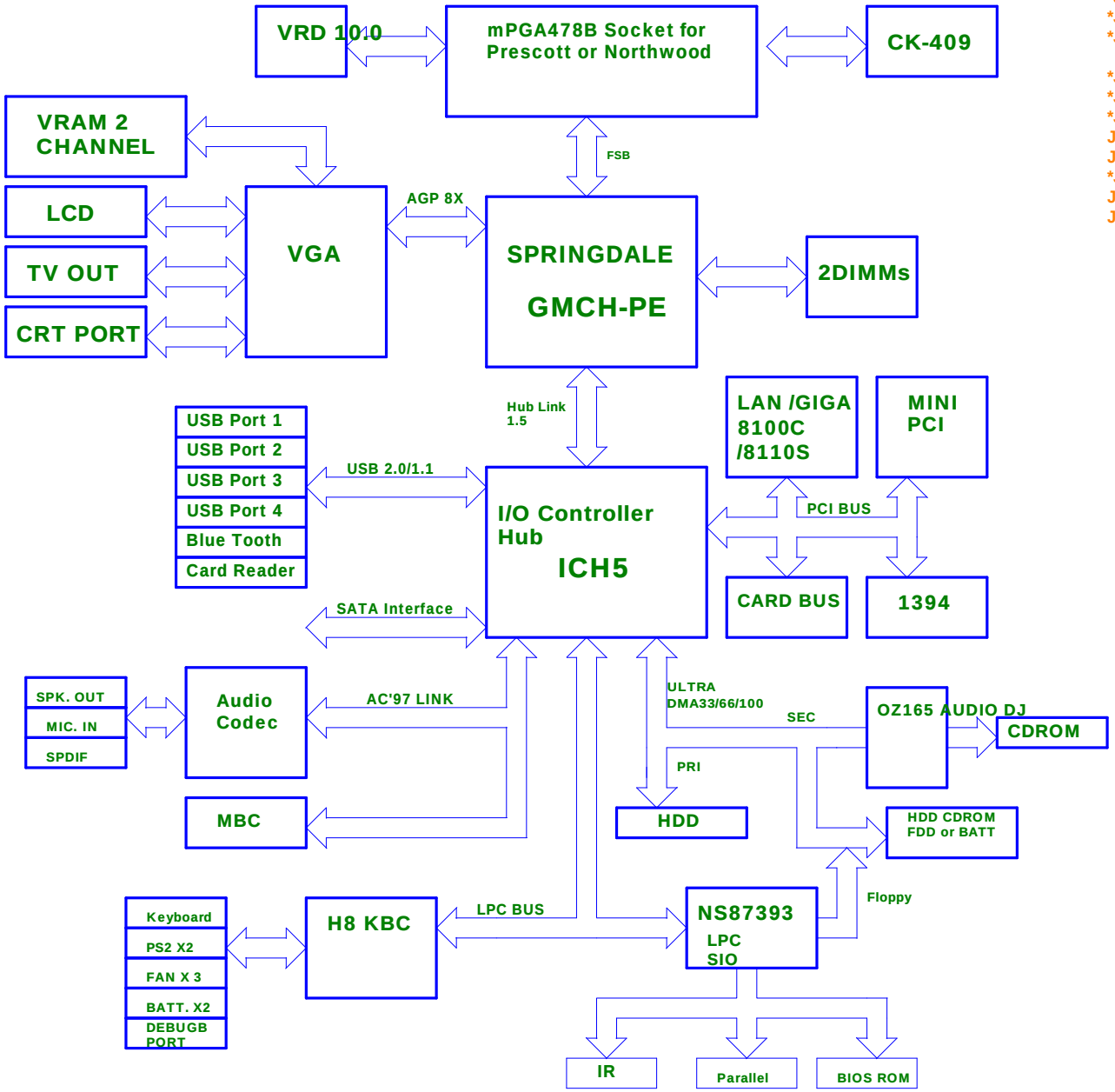

J1	+2.5/2.8	OPEN
J2	RST#	OPEN
*J3	+1.25V	CLOSE
*J4	+1.2VS	CLOSE
*J5	+2.5V	CLOSE
J6	TEST	OPEN
*J7	VDD3	CLOSE
*J8	VDD5	CLOSE
*J9	+1.5VS	CLOSE
J10	RTCRST#	OPEN
J11	TEST	OPEN
*J12	GVTT	CLOSE
J13	VID0	OPEN
J14	RSTVBAT	OPEN

PAGE TITLE

01. BLOCK DIAGRAM
02. CPU-1
03. CPU-2
04. CLOCK GEN.
05. GMCH-1
06. GMCH-2
07. GMCH-3
08. DIMMA
09. DIMMB
10. AGP/POWER
11. GMC1
12. GMC2
13. VGA CONNECTOR
14. ICH5-1
15. ICH5-2
16. ICH5-3
17. HDD CDROM AUDIO DJ
18. PCI PC1410
19. PCI 1394 TI TSB43AB21
20. LAN RTL8100C/RTL8110S
21. LPC SUPER I/O NS393
22. LPC H8
23. AC"97 CODEC ALC202
24. FAN MBC MINIPCI
25. ACIN POWER BUTTON
26. D/D CONNECTOR
27. VCORE
28. SYSTEM POWER 1
29. SYSTEM POWER 2

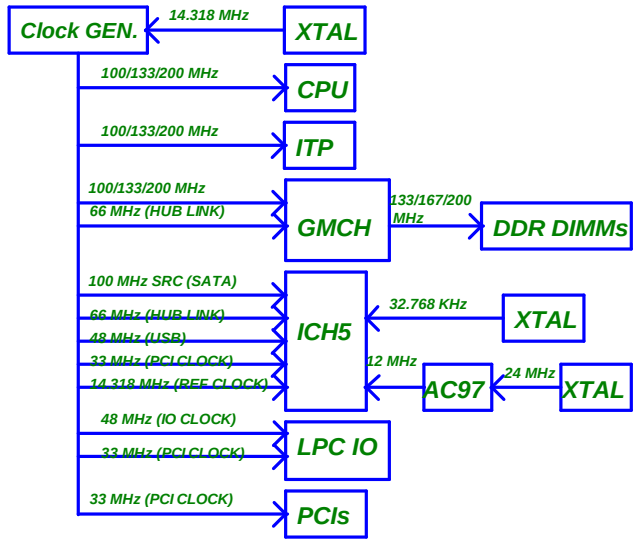

Title	D500E	
Size	Document Number 2431 BLOCK DIAGRAM	Rev 3.0
Date: 星期一, 十二月 15, 2003	Sheet 1 of 29	

PDF 檔案以 "pdfFactory Pro" 試用版建立 www.pdffactory.com

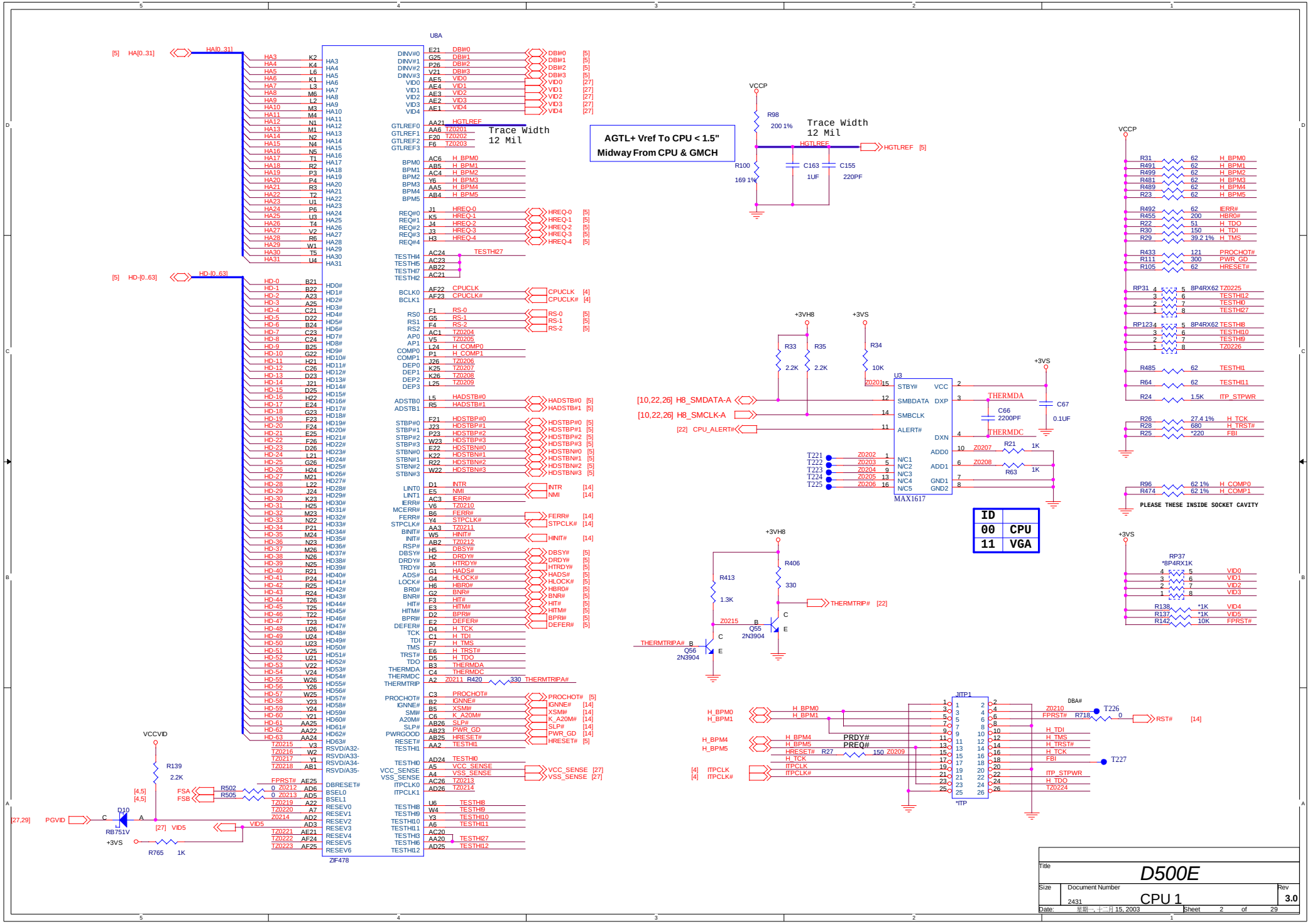

PDF 檔案以 "pdfFactory Pro" 試用版建立 www.pdffactory.com

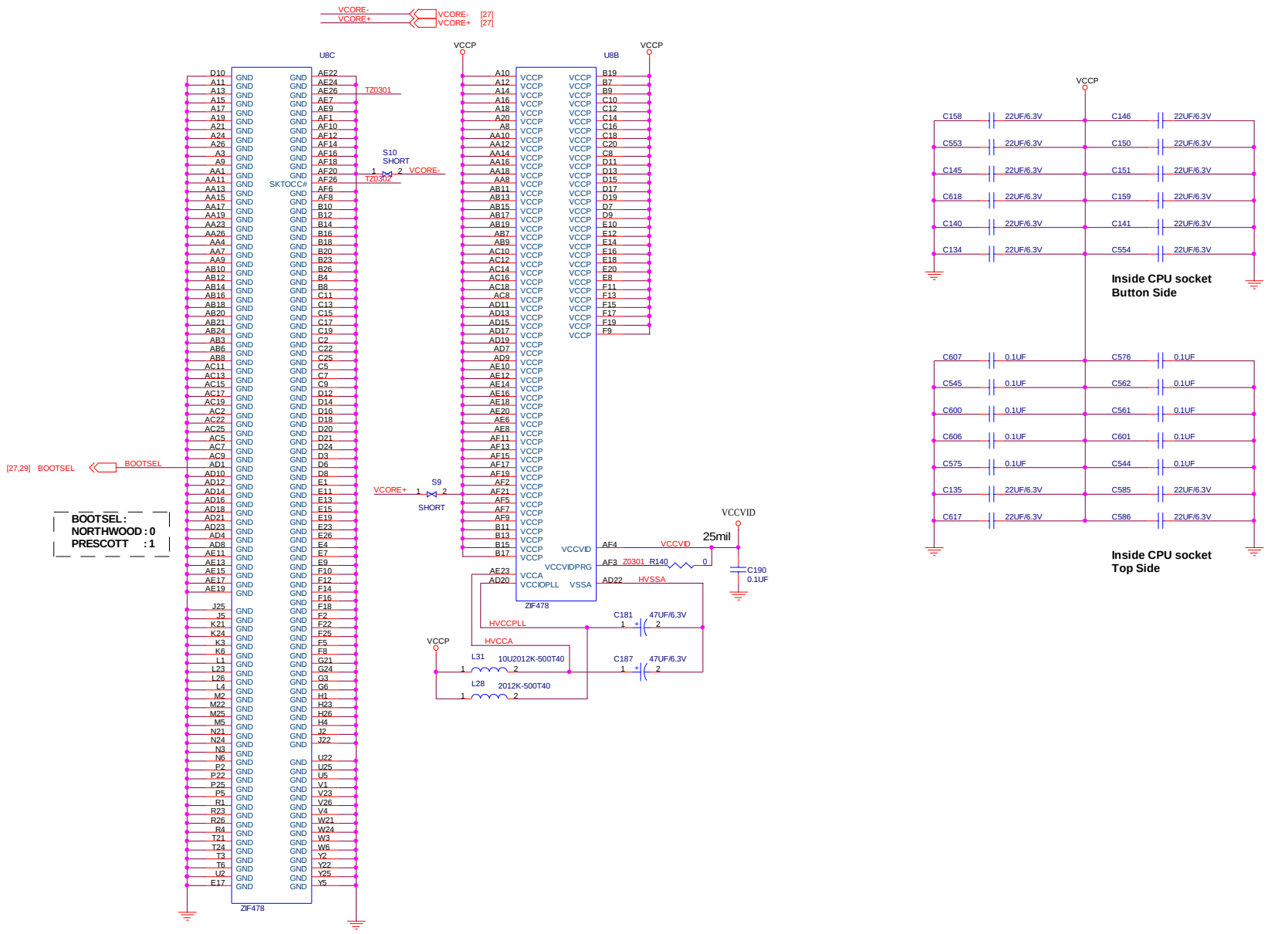

Title	D500E	
Size	Document Number 2431 CPU 2	Rev 3.0
Date: 星期一, 十二月 15, 2003	Sheet 3 of 29	

PDF 檔案以 "pdfFactory Pro" 試用版建立 www.pdffactory.com

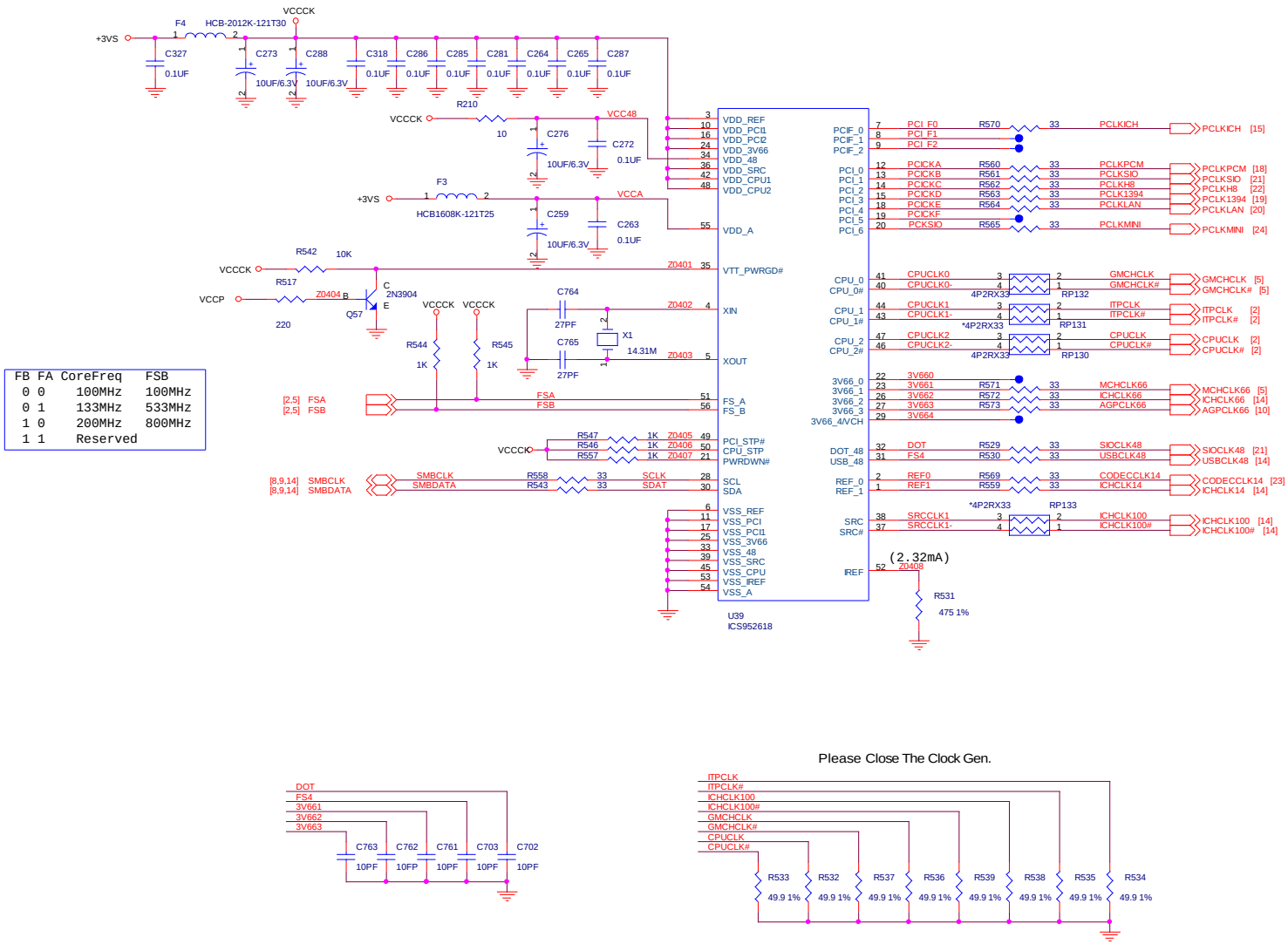

FB	FA	CoreFreq	FSB
0	0	100MHz	100MHz
0	1	133MHz	533MHz
1	0	200MHz	800MHz
1	1	Reserved	

Please Close The Clock Gen.

Title	D500E		
Size: Custom	Document Number: 2431	CLOCK GEN.	Rev: 3.0
Date: 星期一, 十二月 15, 2003	Sheet 4 of 29		

PDF 檔案以 "pdfFactory Pro" 試用版建立 www.pdffactory.com

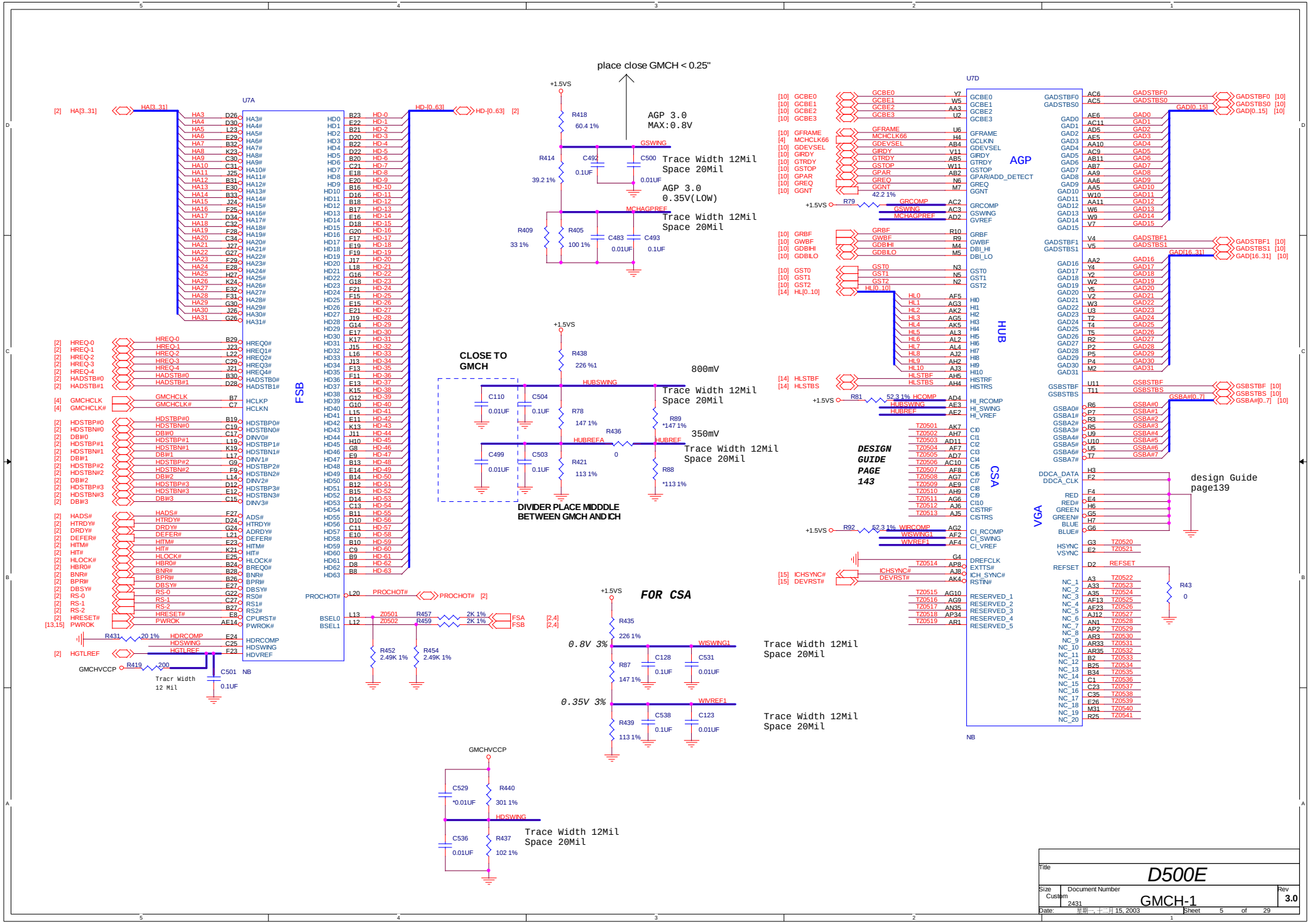

PDF 檔案以 "pdfFactory Pro" 試用版建立 www.pdffactory.com

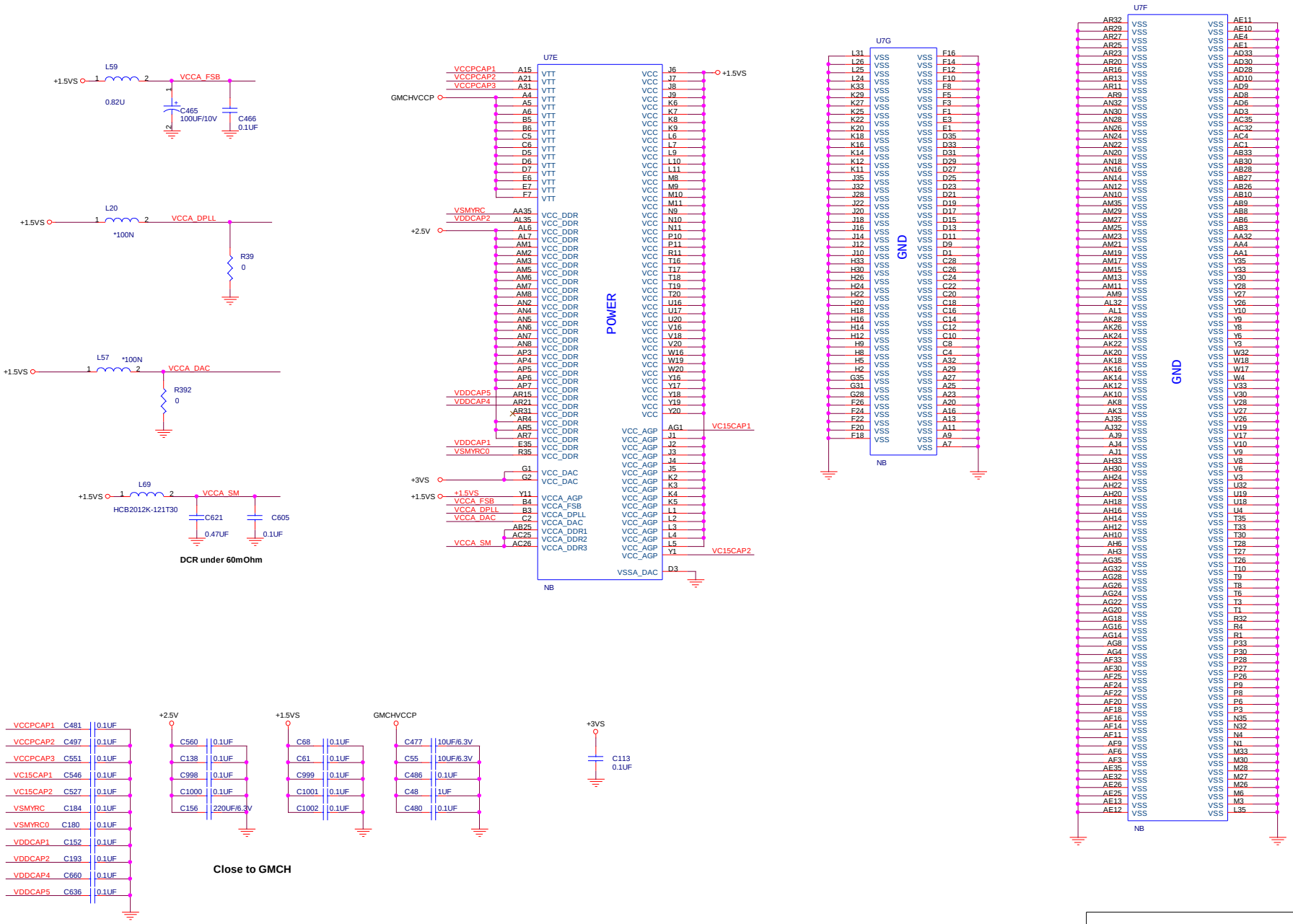

PDF 檔案以 "pdfFactory Pro" 試用版建立 www.pdffactory.com

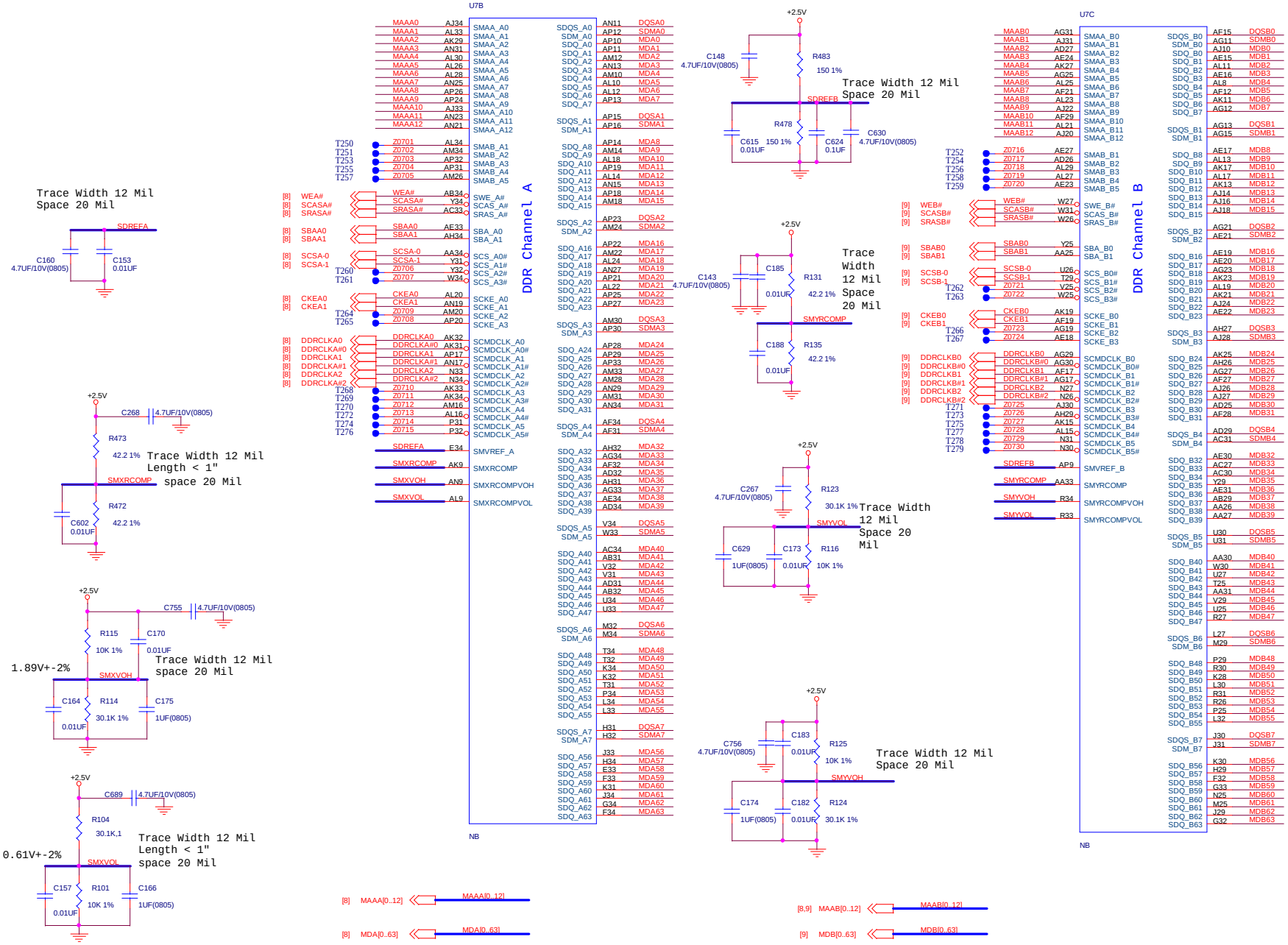

Title: D500E

Size: Custom | Document Number: 2431 GMCH-3 | Rev: 3.0

Date: 星期一, 十二月 15, 2003 | Sheet 7 of 29

PDF 檔案以 "pdfFactory Pro" 試用版建立 www.pdffactory.com

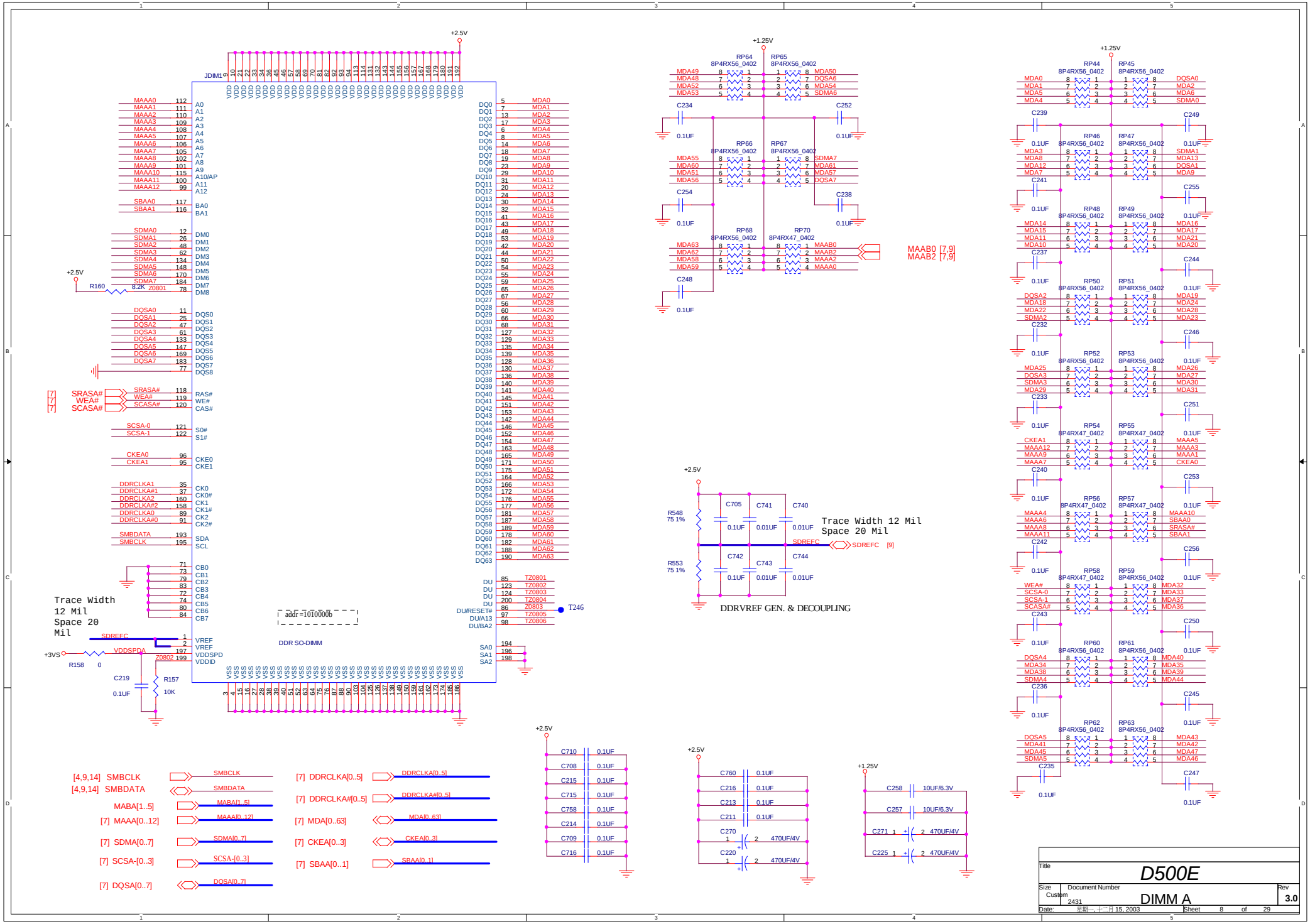

PDF 檔案以 "pdfFactory Pro" 試用版建立 www.pdffactory.com

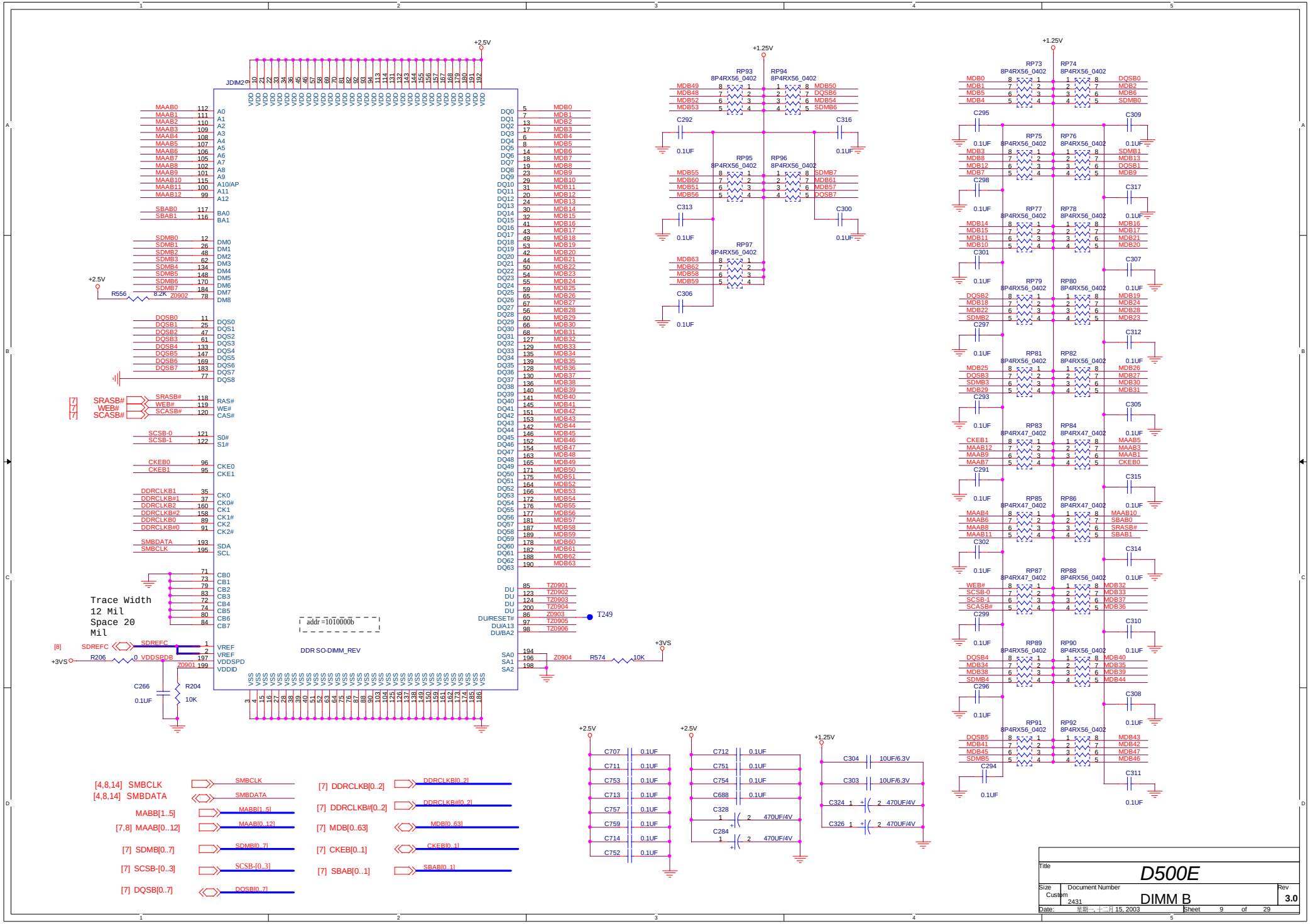

PDF 檔案以 "pdfFactory Pro" 試用版建立 www.pdffactory.com

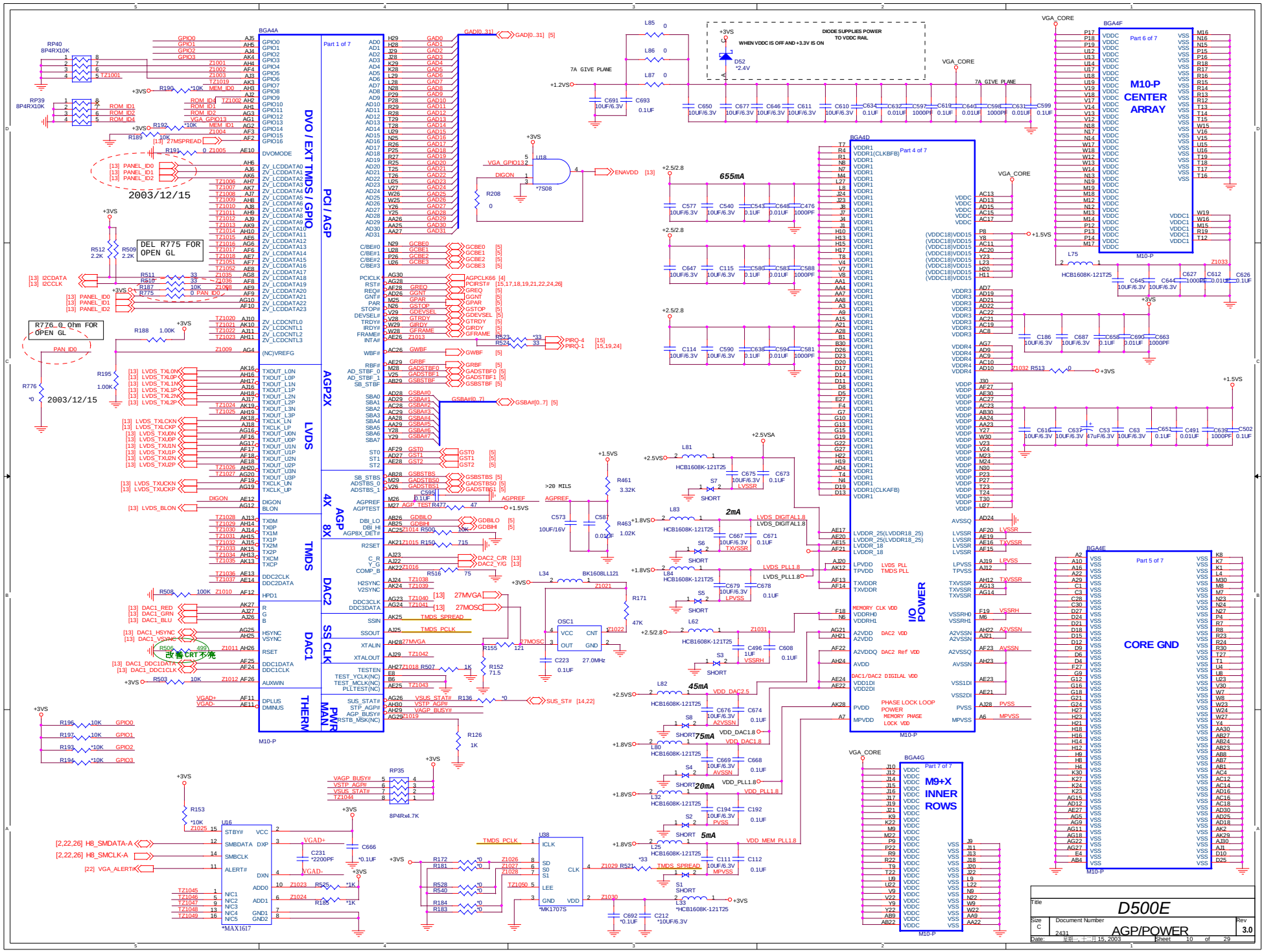

PDF 檔案以 "pdfFactory Pro" 試用版建立 www.pdffactory.com

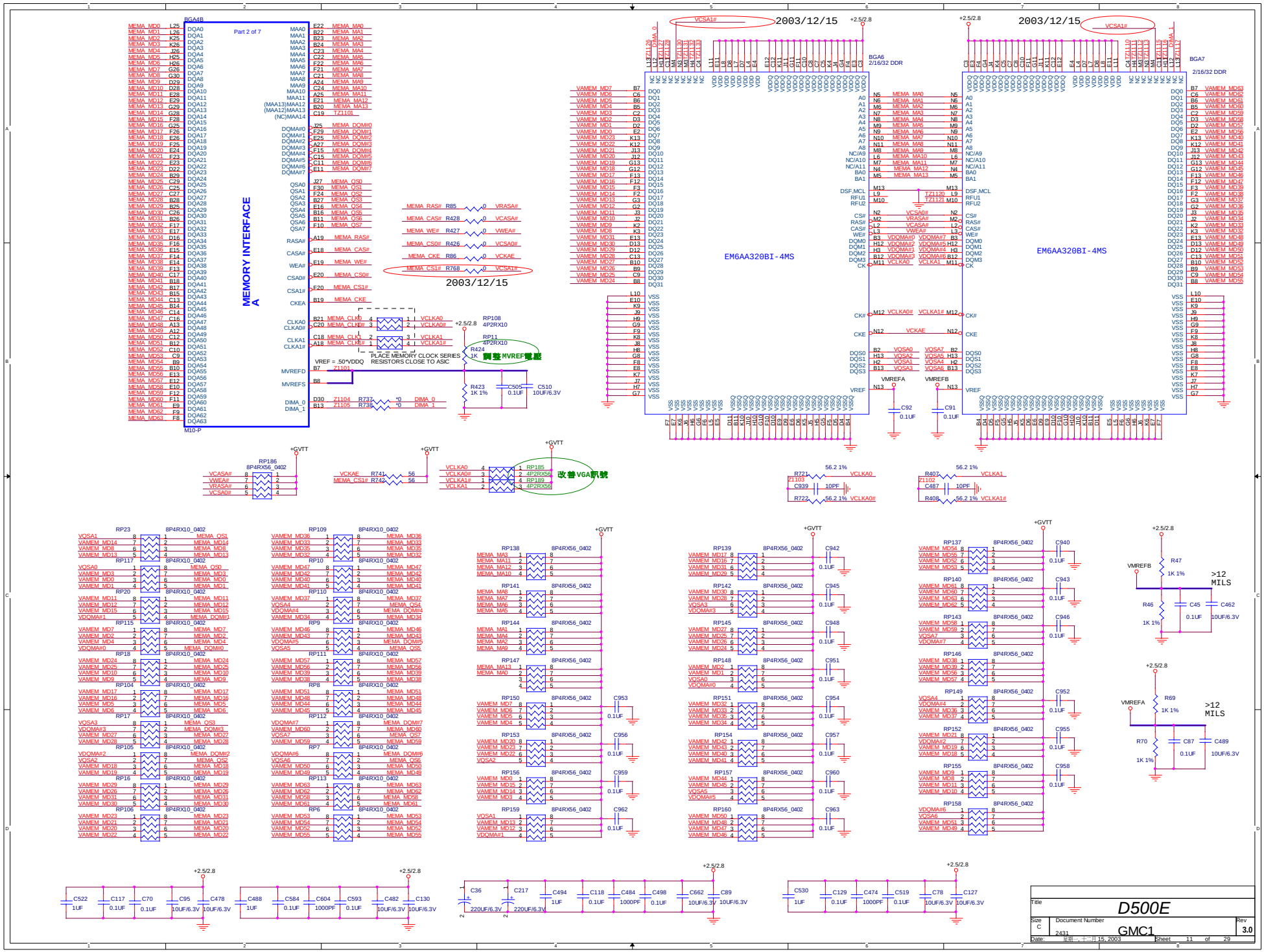

PDF 檔案以 "pdfFactory Pro" 試用版建立 www.pdffactory.com

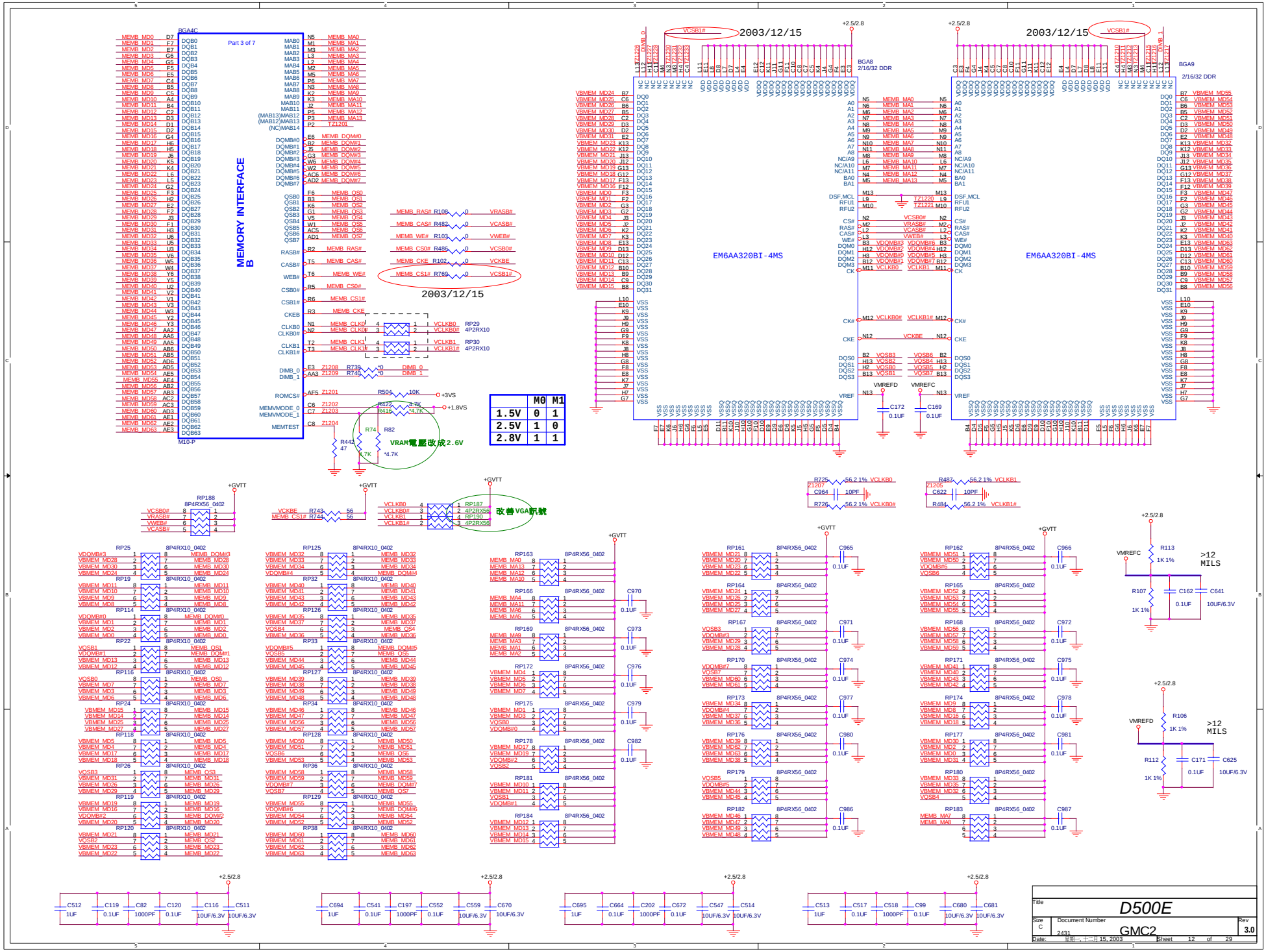

	M0	M1
1.5V	0	1
2.5V	1	0
2.8V	1	1

PDF 檔案以 "pdfFactory Pro" 試用版建立 www.pdffactory.com

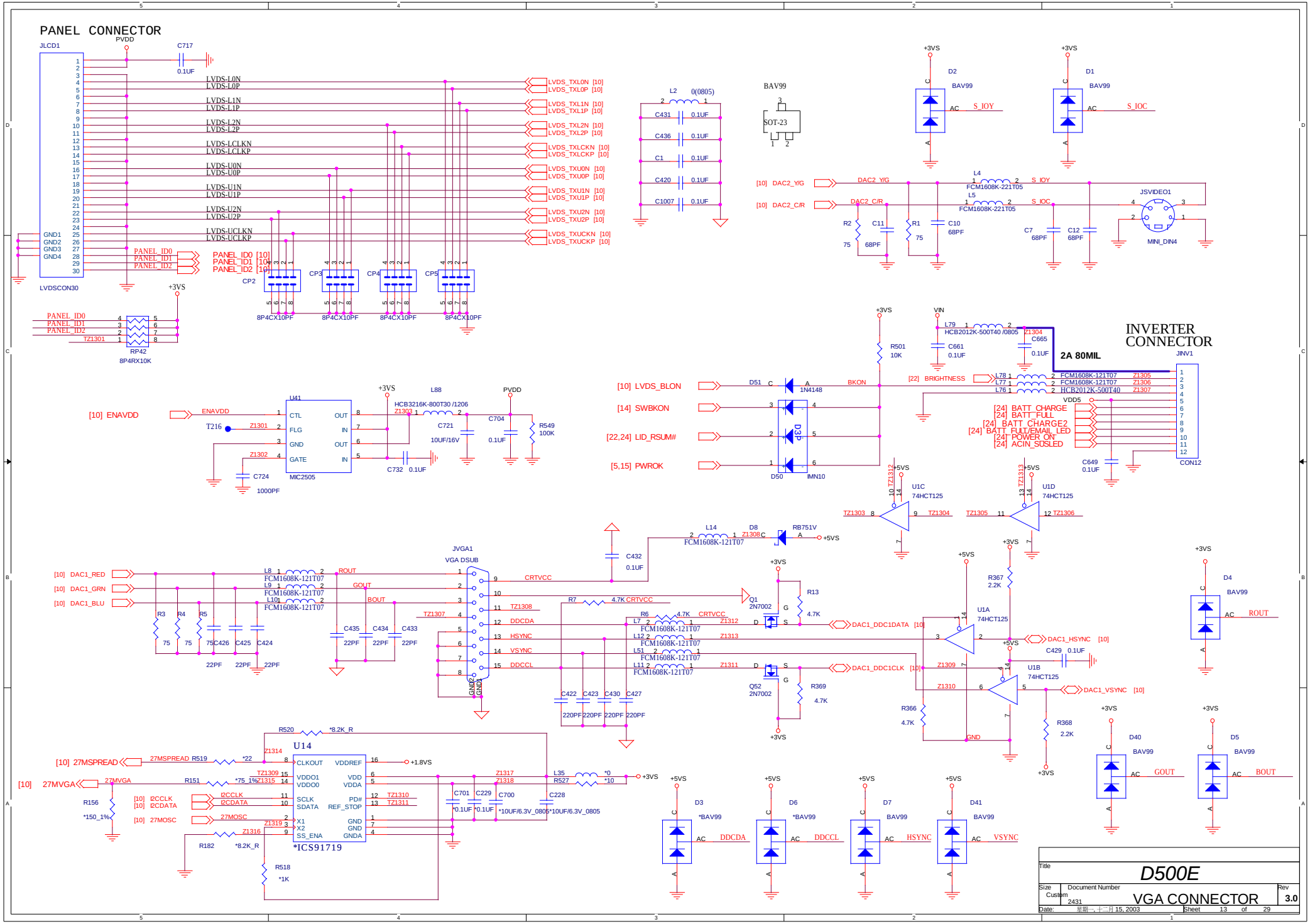

PDF 檔案以 "pdfFactory Pro" 試用版建立 www.pdffactory.com

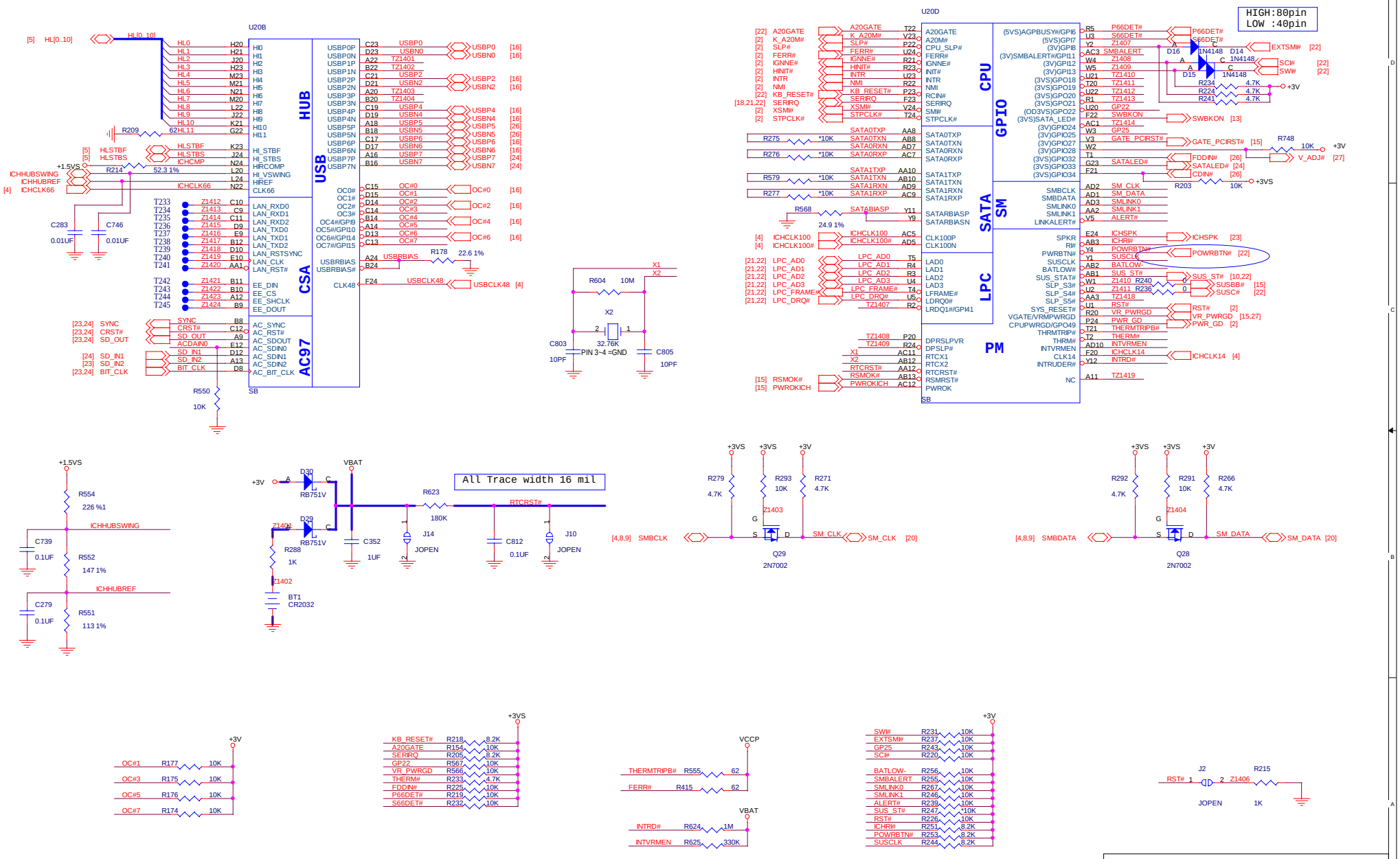

PDF 檔案以 "pdfFactory Pro" 試用版建立 www.pdffactory.com

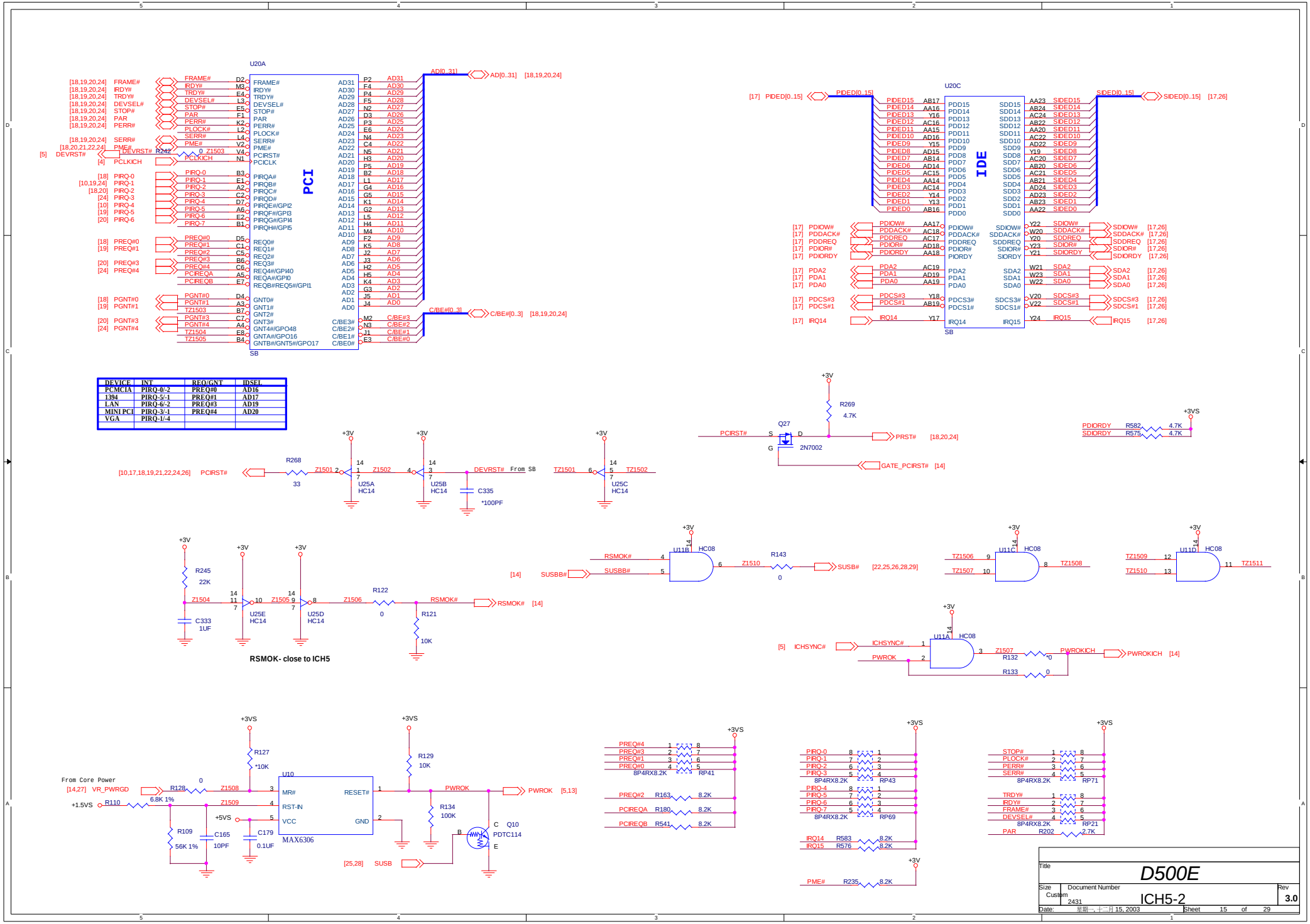

DEVICE	INT	REQ/GNT	IDSEL
PCMCIA	PIRQ-0/-2	PREQ#0	AD16
1394	PIRQ-5/-1	PREQ#1	AD17
LAN	PIRQ-6/-2	PREQ#3	AD19
MINI PCI	PIRQ-3/-1	PREQ#4	AD20
VGA	PIRQ-1/-4		

PDF 檔案以 "pdfFactory Pro" 試用版建立 www.pdffactory.com

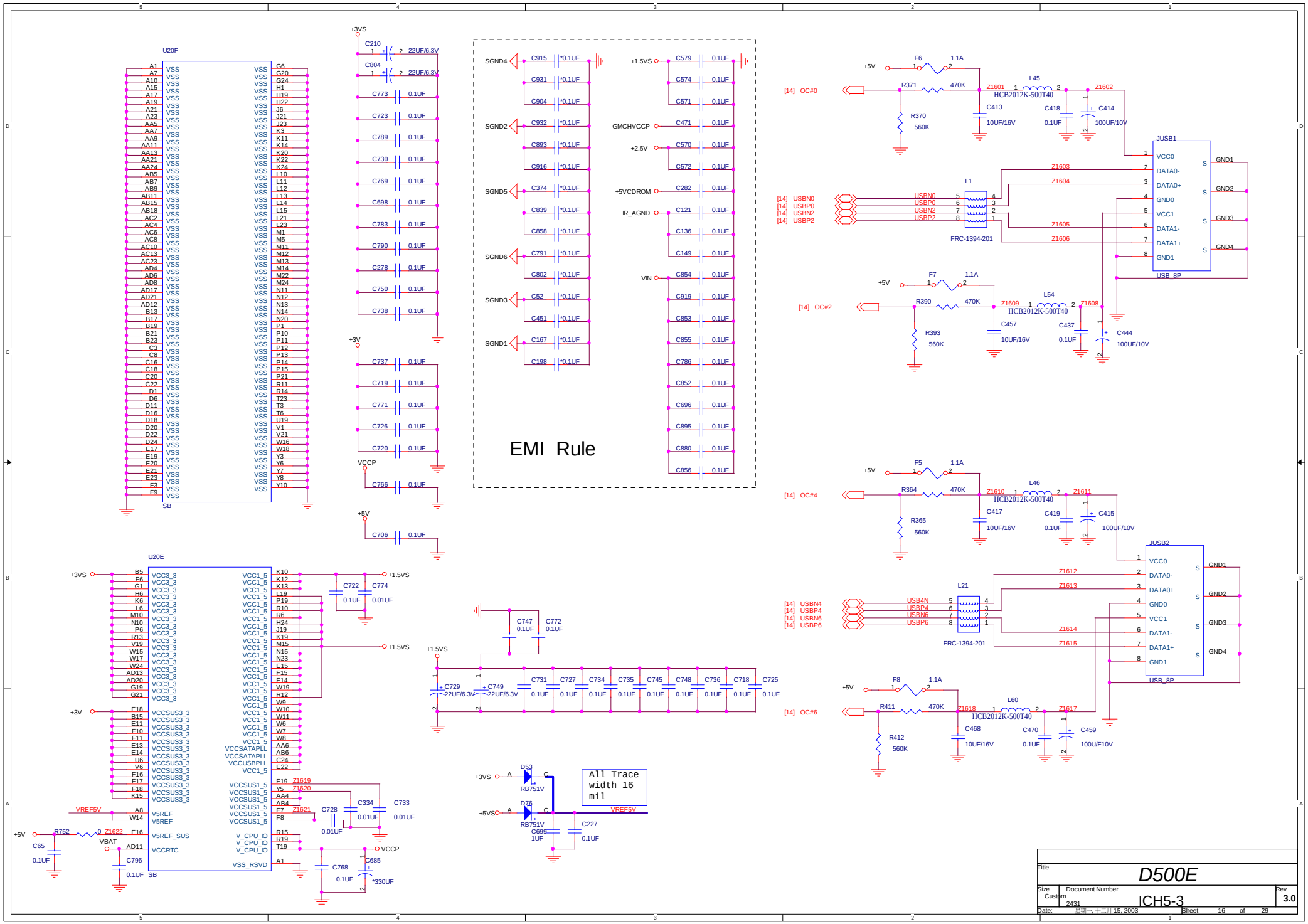

PDF 檔案以 "pdfFactory Pro" 試用版建立 www.pdffactory.com

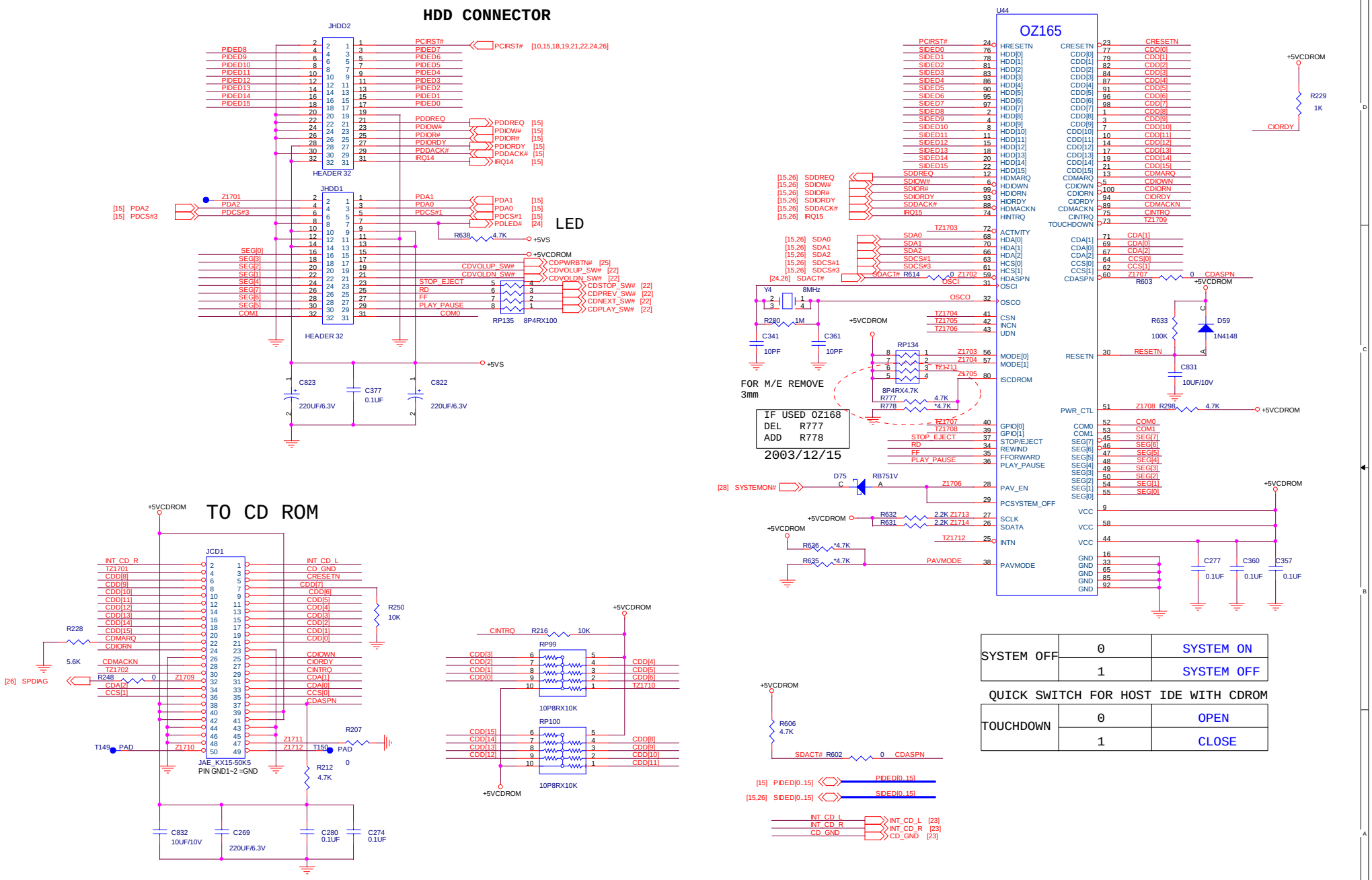
HDD CONNECTOR
JHDD2
HEADER 32
JHDD1
HEADER 32
LED
R638 4.7K
+5VS
+5VCDROM
RP135 8P4RX100
C823 220UF/6.3V
C377 0.1UF
C822 220UF/6.3V
TO CD ROM
JCD1
JAE_KX15-50K5
PIN GND1~2 =GND
R228 5.6K
R250 10K
R207 0
R212 4.7K
C832 10UF/10V
C269 220UF/6.3V
C280 0.1UF
C274 0.1UF
RP99 10P8RX10K
RP100 10P8RX10K
R216 10K
U44
OZ165
R229 1K
R606 4.7K
R633 100K
D59 1N4148
C831 10UF/10V
Y4 8MHz
R280 1M
C341 10PF
C361 10PF
RP134 8P4RX4.7K
R777 4.7K
R778 *4.7K
FOR M/E REMOVE
3mm
IF USED OZ168
DEL R777
ADD R778
2003/12/15
D75 RB751V
R632 2.2K
R631 2.2K
R626 *4.7K
R635 *4.7K
R603 0
R298 4.7K
C277 0.1UF
C360 0.1UF
C357 0.1UF
R248 0
R602 0
R614 0
R612 0
R609 0
R610 0
R611 0
R613 0
R615 0
R616 0
R617 0
R618 0
R619 0
R620 0
R621 0
R622 0
R623 0
R624 0
R625 0
R626 0
R627 0
R628 0
R629 0
R630 0
R631 0
R632 0
R633 0
R634 0

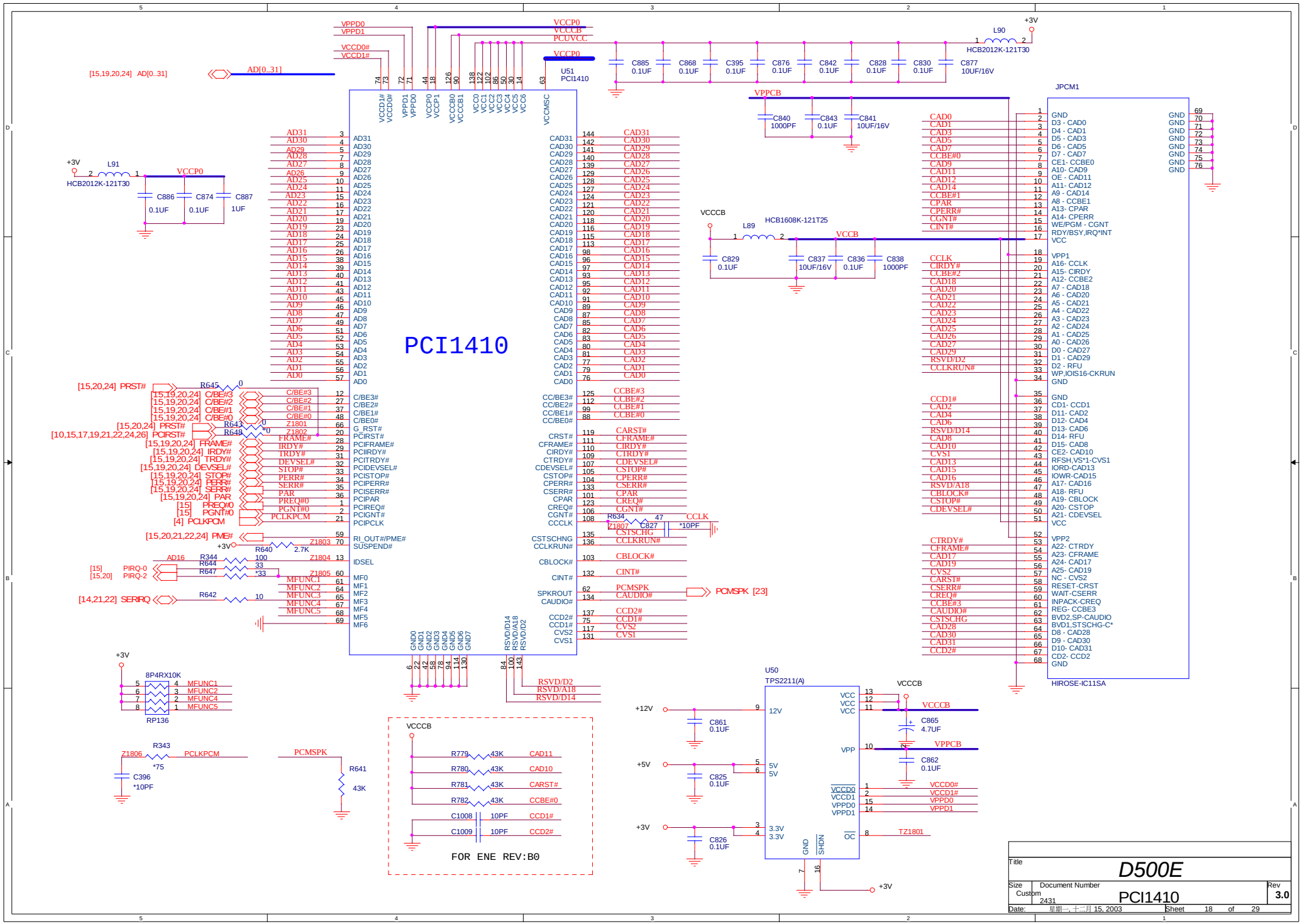

PDF 檔案以 "pdfFactory Pro" 試用版建立 www.pdffactory.com

TSB43AB21 1 PORT 1394
TSB43AB22 2 PORT 1394

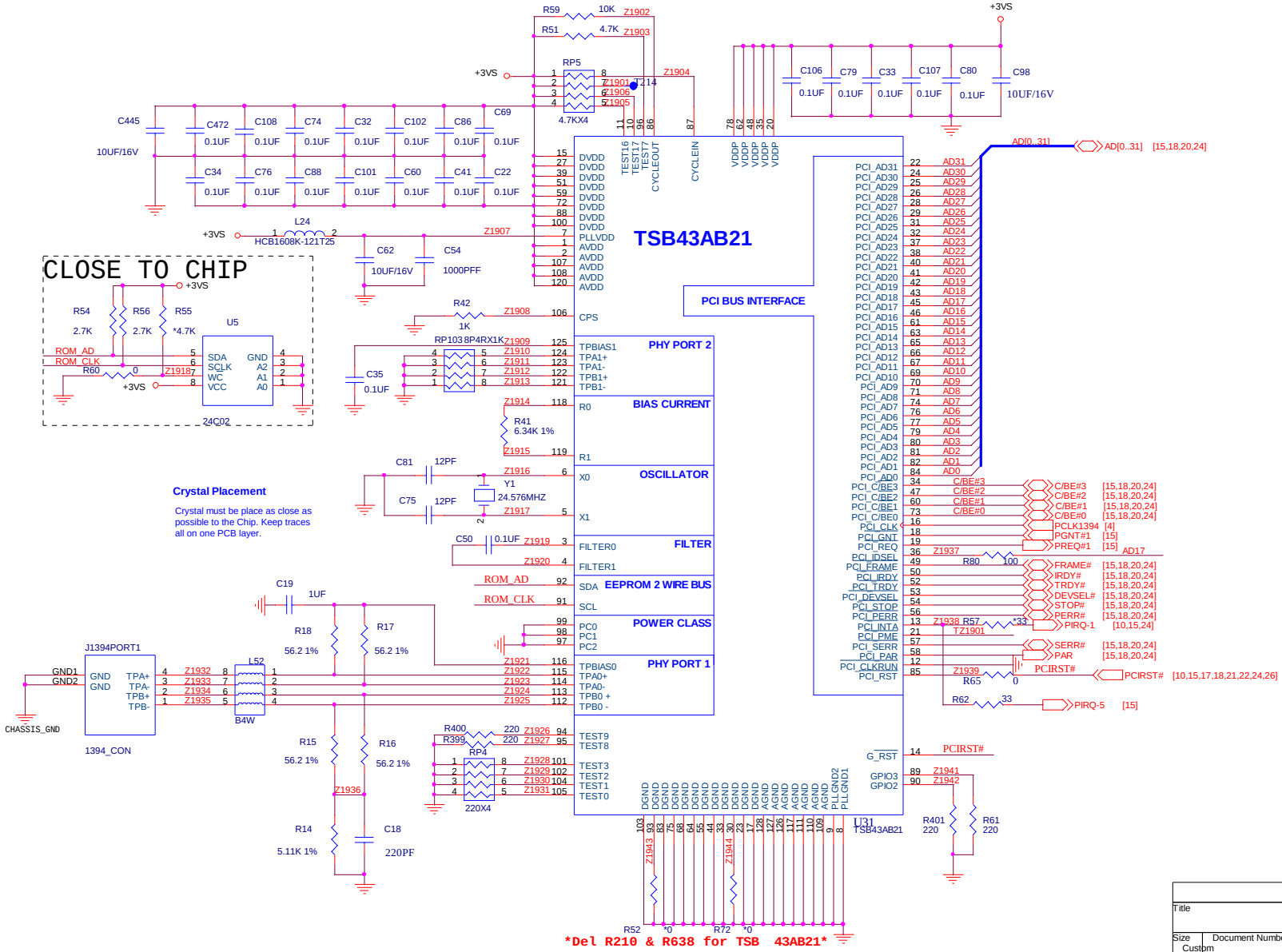

Title	D500E
Size	Custom
Document Number	2431 PCI1394
Rev	3.0
Date:	星期一, 十二月 15, 2003
Sheet	19 of 29

PDF 檔案以 "pdfFactory Pro" 試用版建立 www.pdffactory.com

	8100C	8110S
TRANSFORMER U6	24ST0023-3	LG-2402S
R380,381,379,382	0	NC
L22	NC	FRC1394-201
C534,535	0.1UF	0.01UF
C532,533	NC	0.01UF
R448,449,450,451	NC	49.9
C525,526	NC	0.01UF
R471	3.6K	2.49K
R493	NC	0
L65,67,73,68	HCB1608K -121T25	NC
L64,71,72,70	NC	HCB1608K -121T25
R494	NC	1K
R749	NC	0
R750 or R751	NC	0

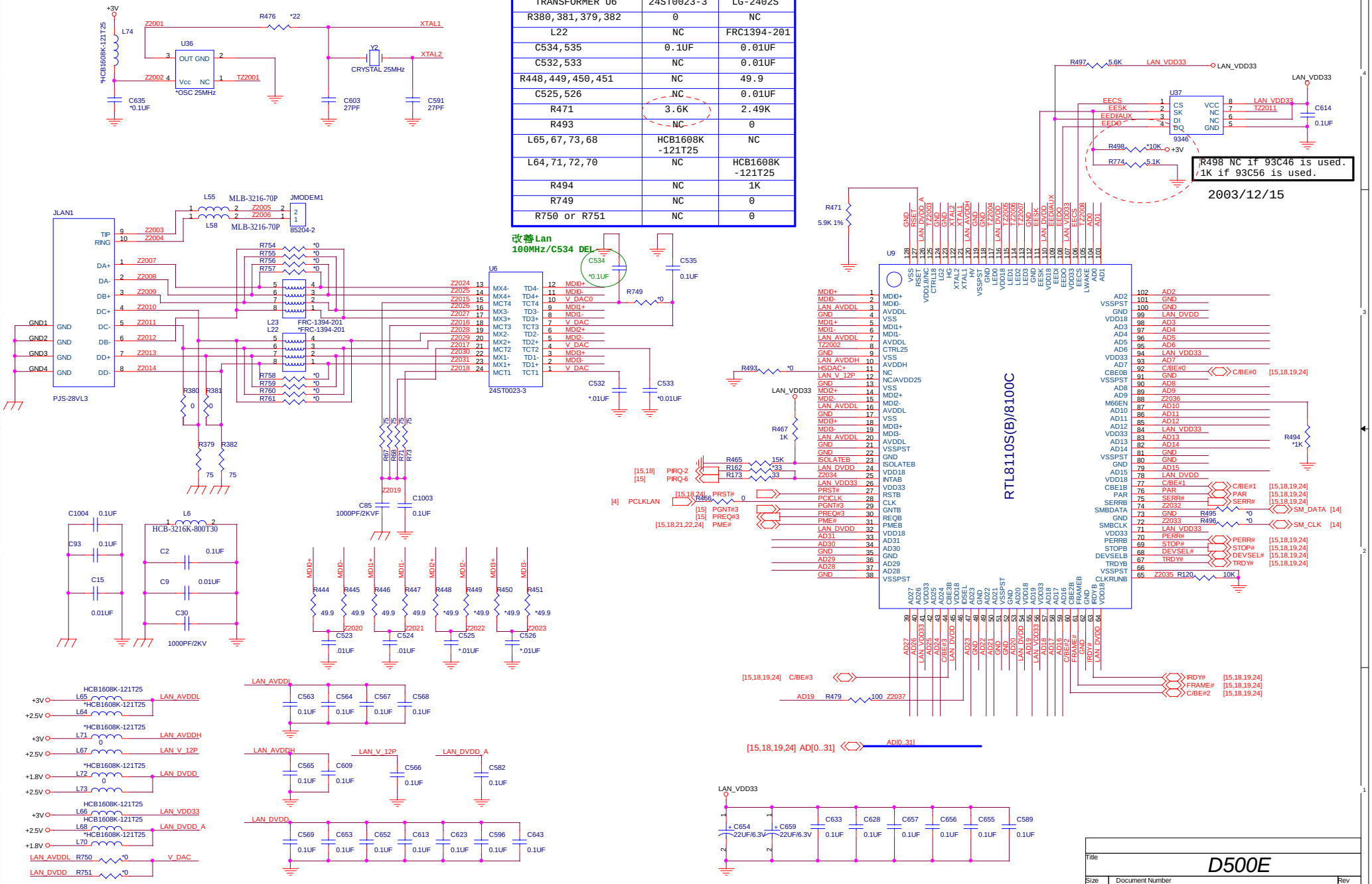

PDF 檔案以 "pdfFactory Pro" 試用版建立 www.pdffactory.com

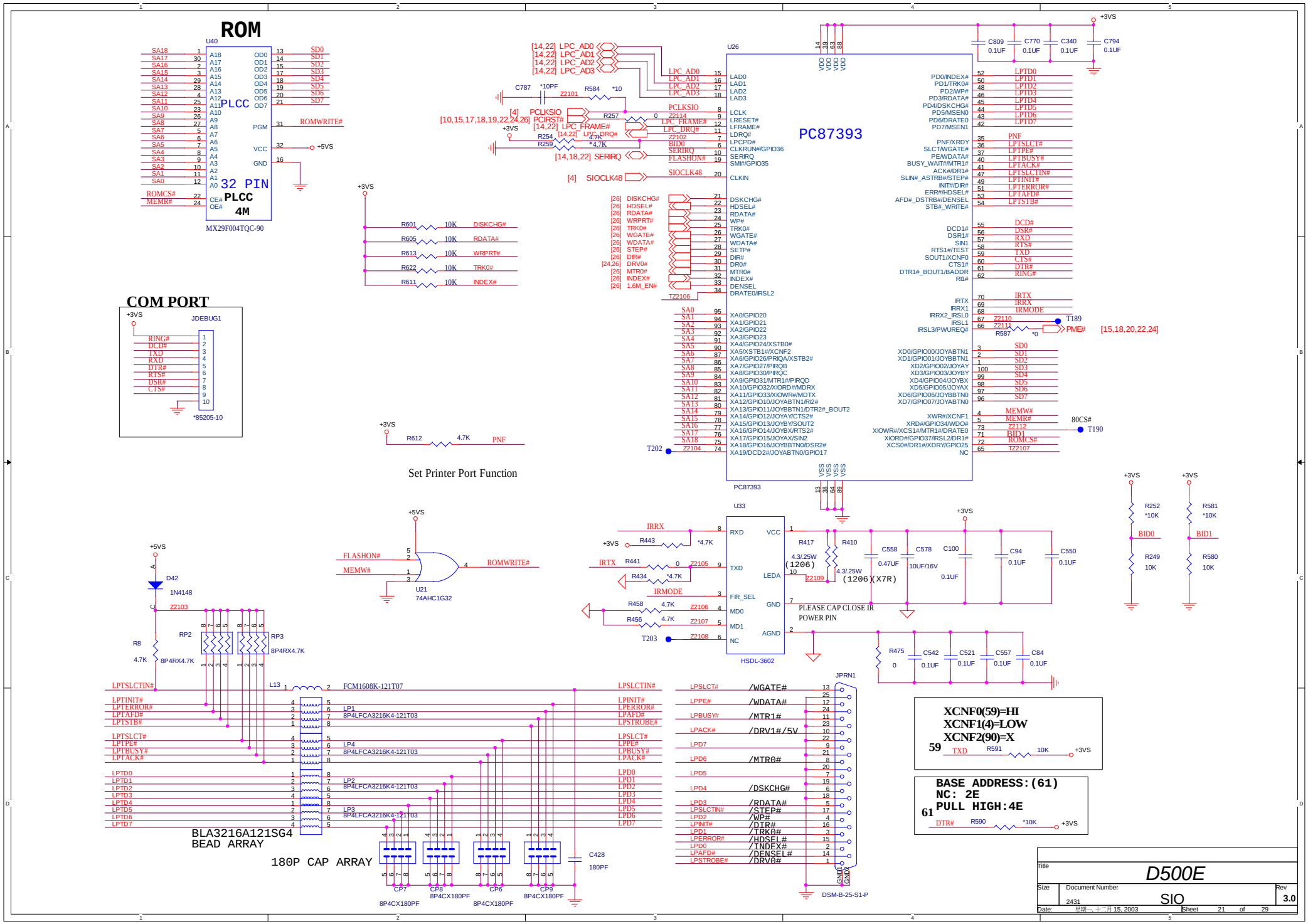

PDF 檔案以 "pdfFactory Pro" 試用版建立 www.pdffactory.com

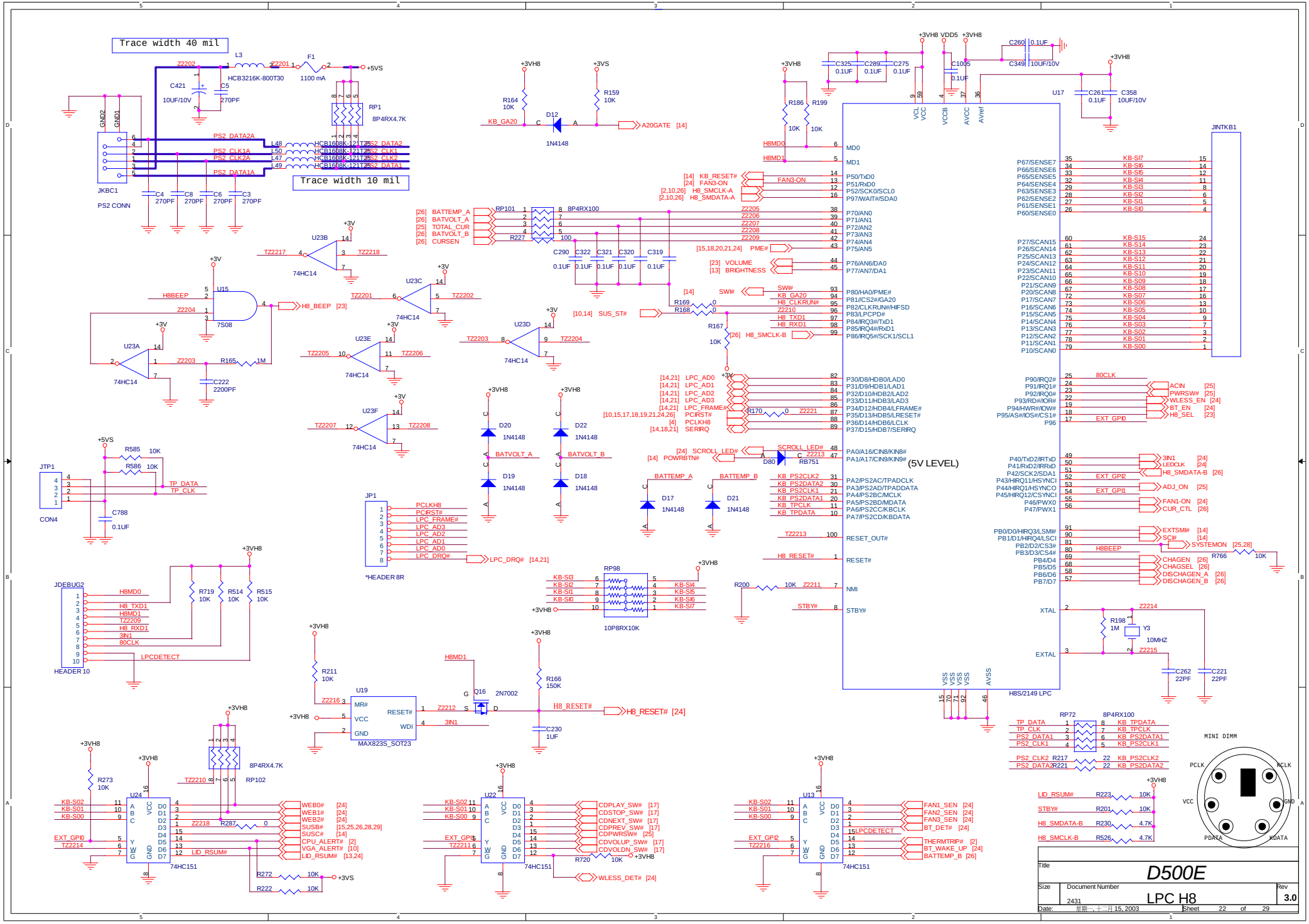

PDF 檔案以 "pdfFactory Pro" 試用版建立 www.pdffactory.com

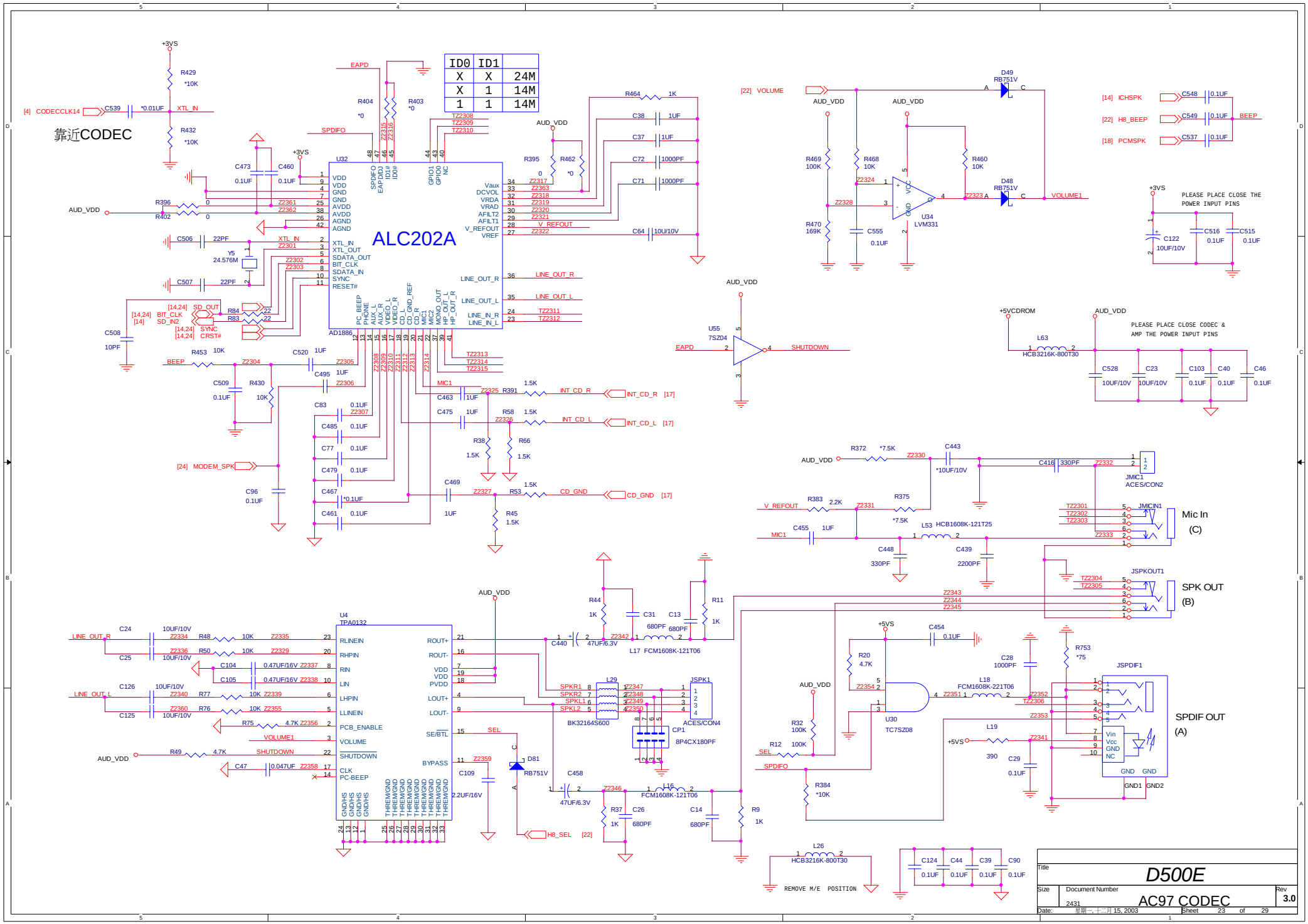

PDF 檔案以 "pdfFactory Pro" 試用版建立 www.pdffactory.com

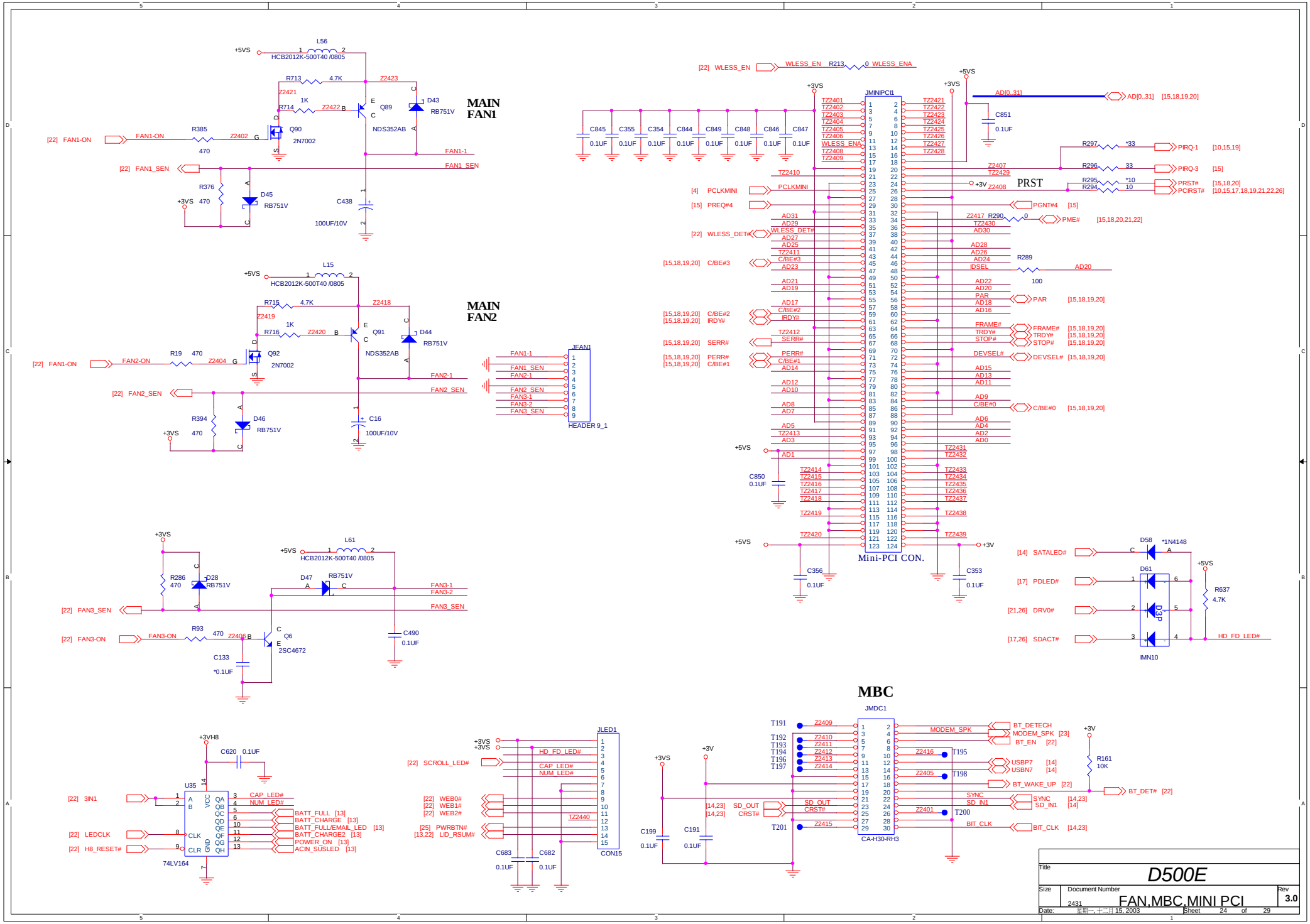

PDF 檔案以 "pdfFactory Pro" 試用版建立 www.pdffactory.com

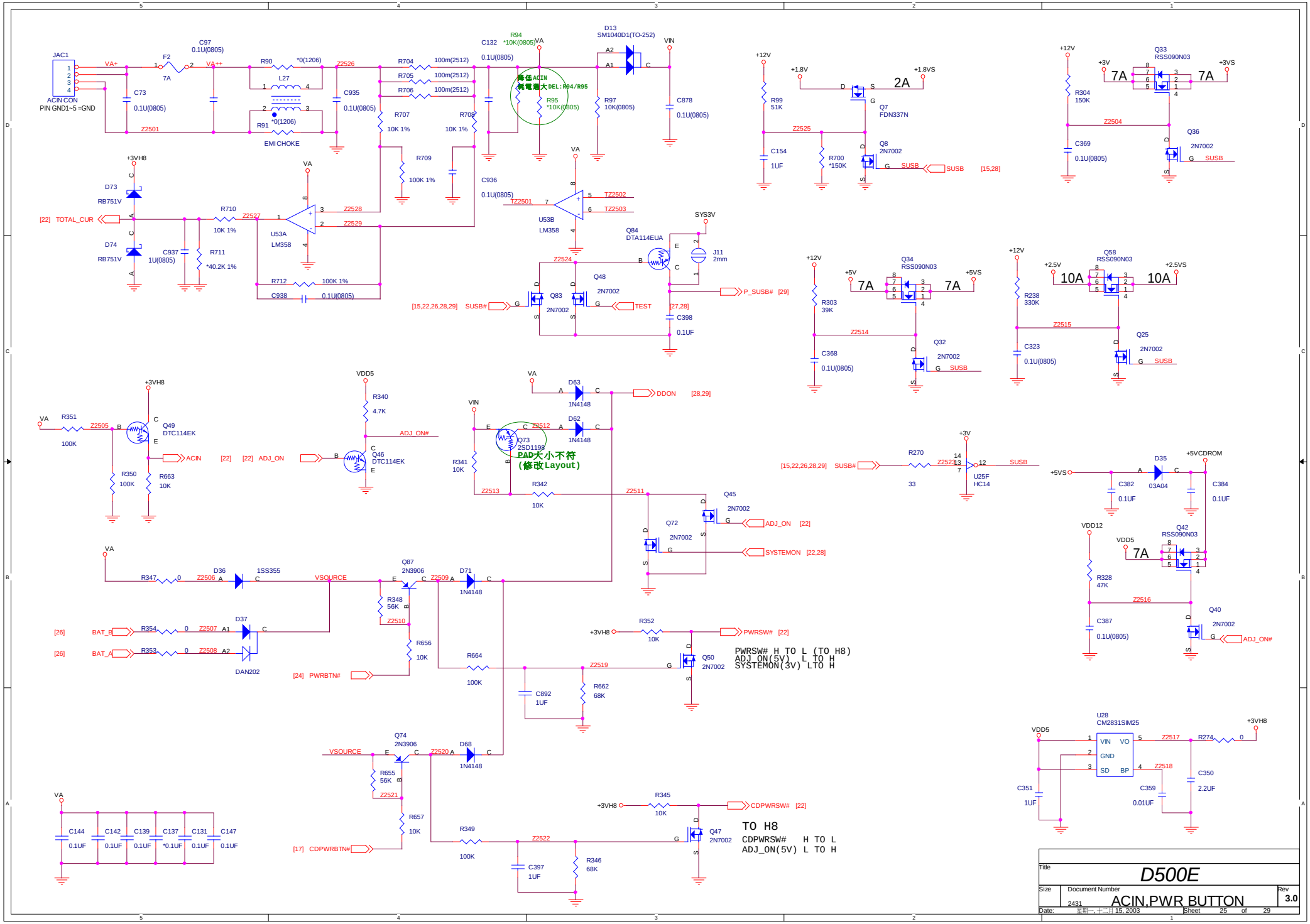

PDF 檔案以 "pdfFactory Pro" 試用版建立 www.pdffactory.com

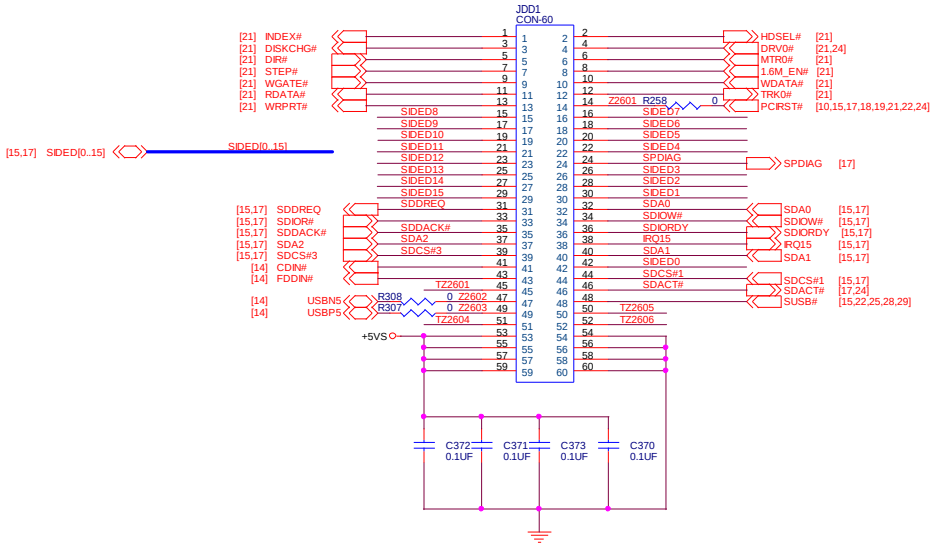

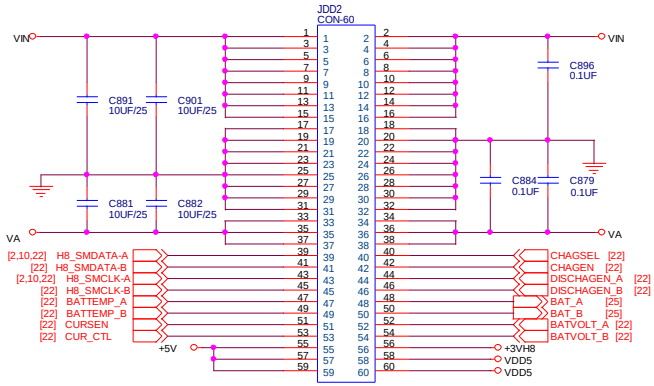

JDD1

JDD2

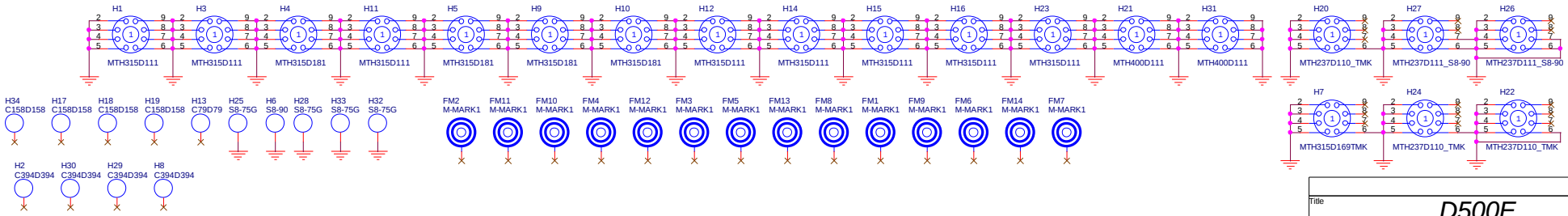

Title	D500E		
Size: Custom	Document Number: 2431	D/D CONNECTOR	Rev: 3.0
Date: 星期一, 十二月 15, 2003	Sheet 26 of 29		

PDF 檔案以 "pdfFactory Pro" 試用版建立 www.pdffactory.com

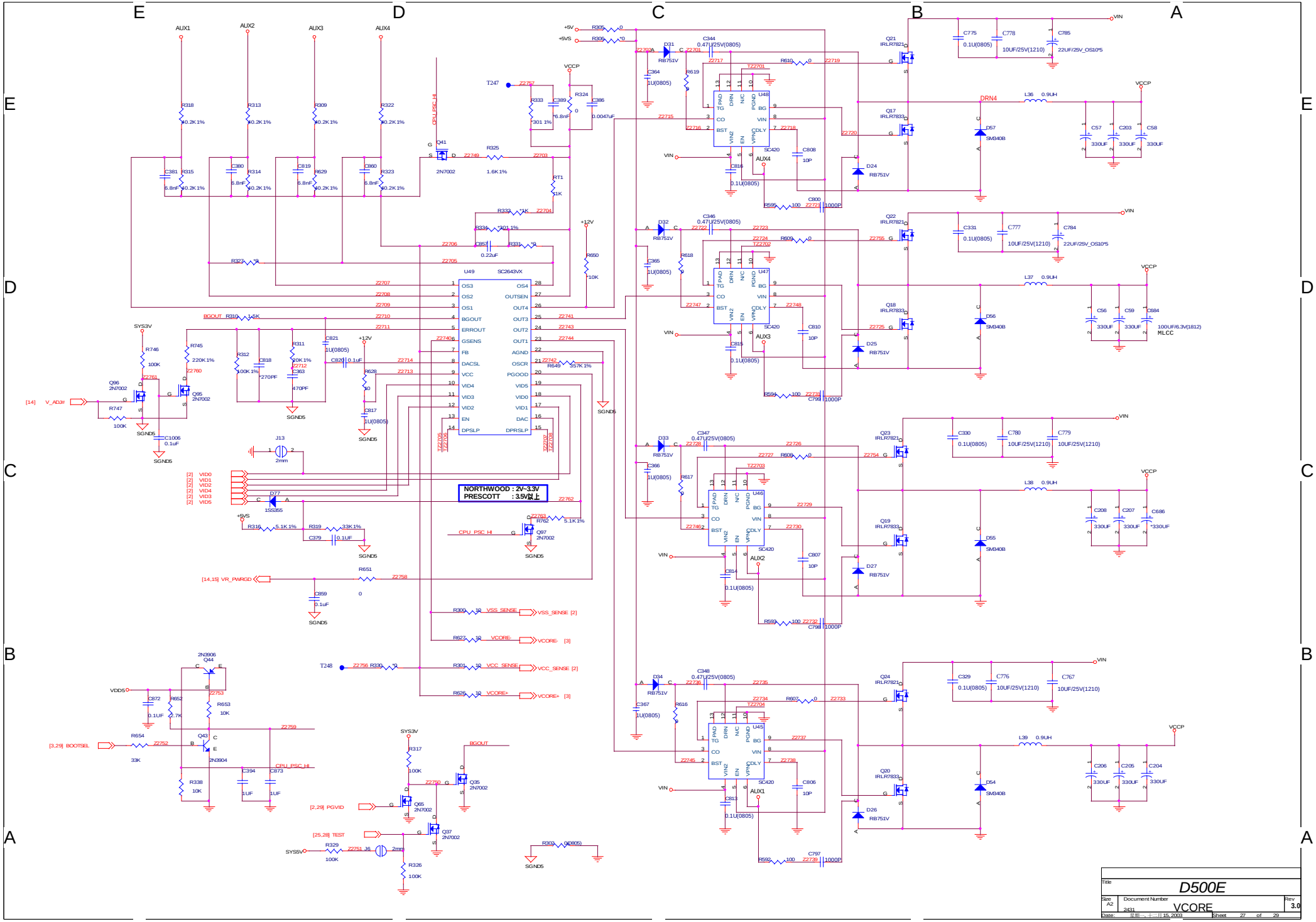

PDF 檔案以 "pdfFactory Pro" 試用版建立 www.pdffactory.com

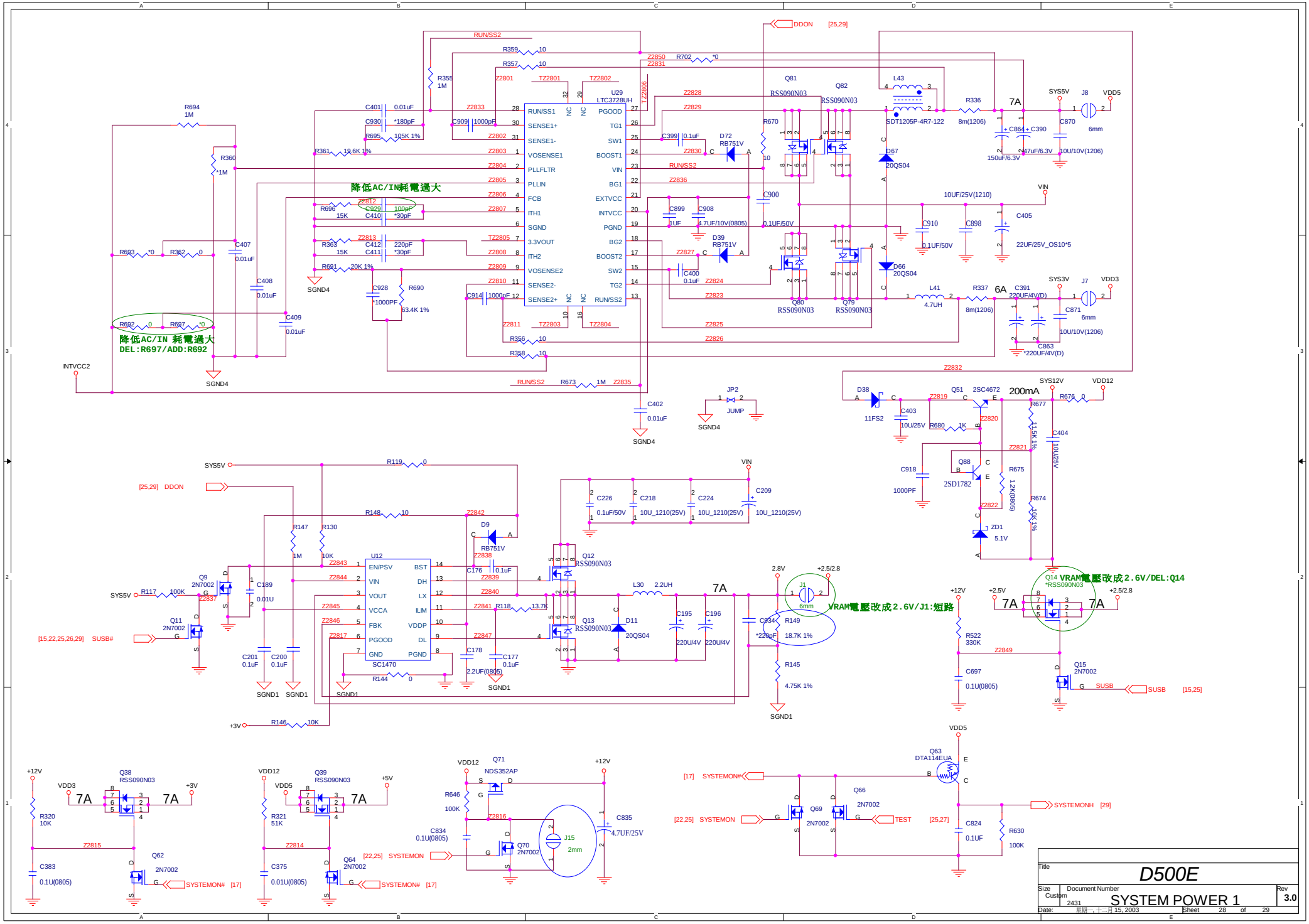

PDF 檔案以 "pdfFactory Pro" 試用版建立 www.pdffactory.com

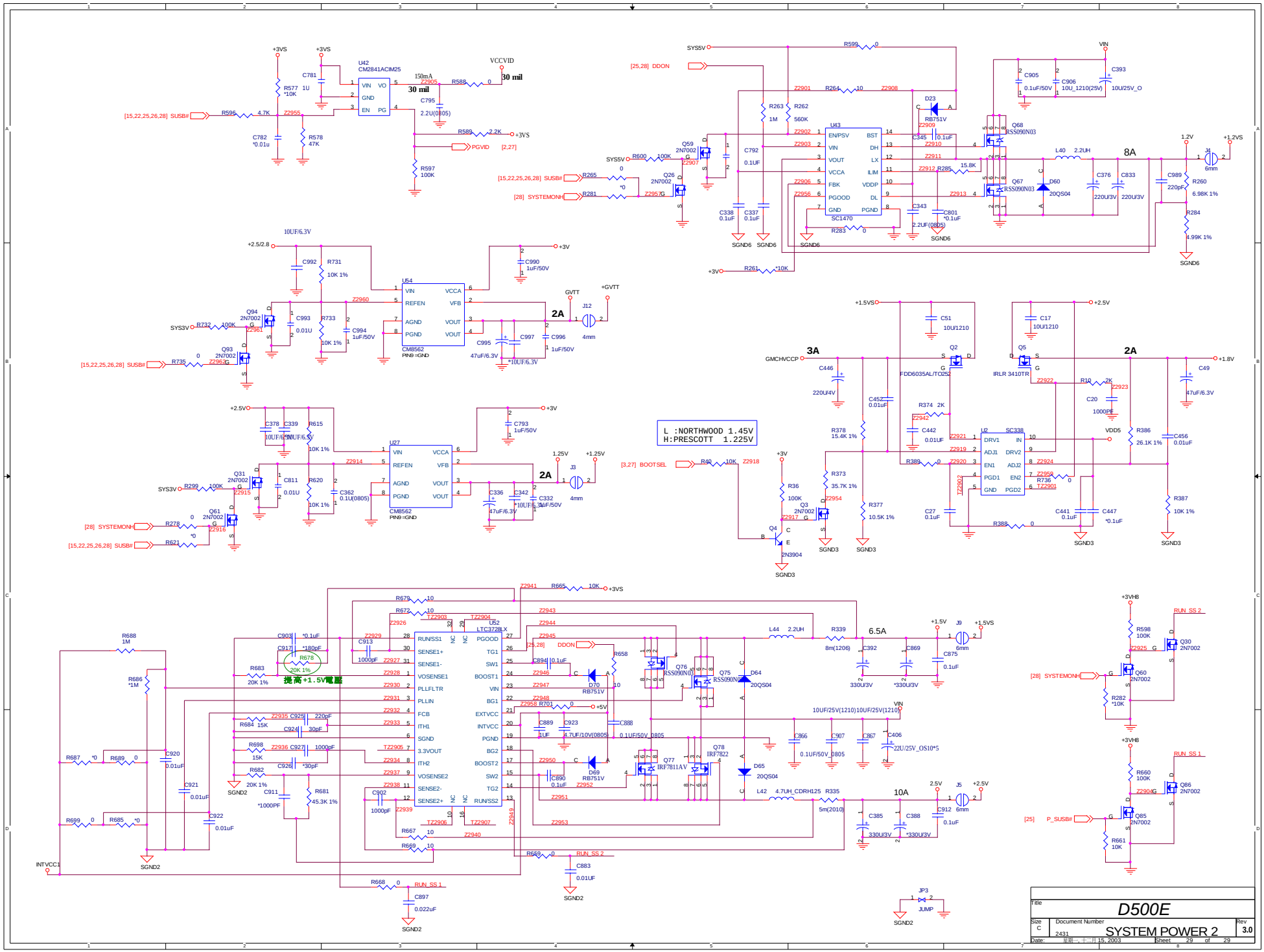

PDF 檔案以 "pdfFactory Pro" 試用版建立 www.pdffactory.com